ALASKA
PipelineProject

Alaska Pipeline Project
Resource Report No. 1 Preliminary Draft

USAG-UR-SGREG-000002

TransCanada ExxonMobil

Introduction

TransCanada Alaska Company, LLC and Foothills Pipe Lines, Ltd., working cooperatively with ExxonMobil, are collectively progressing the Alaska Pipeline Project[1]. The goal of APP is to treat, transport, and deliver gas from the North Slope of Alaska to markets in North America. This preliminary draft resource report pertains only to that portion of the Project in Alaska. Unless the context otherwise requires, references in the resource reports to APP refer only to the Alaska portion of the project.

The pipelines, Gas Treatment Plant, and associated facilities described in this document are based on the estimated volumes of gas from projected customer commitments. If final volumes are significantly different, the design will be adjusted as needed.

The location information, facility descriptions, resource impact data, construction methods, and mitigation measures presented in this report are preliminary and subject to change. APP is currently conducting engineering studies, environmental resource surveys, agency consultations, and stakeholder outreach efforts to further refine and define the details of the project. In particular, the route through the following areas is being more closely analyzed:

- Alaska's North Slope, including the Prudhoe Bay Unit Area;
- The AtigunPass through the Brooks Range;
- The Yukon River crossing;
- The City of Fairbanks, including residential and commercial development, and proximity to Eielson Air Force Base;
- The Delta Junction area, including waterbody crossings and residential development;
- Multiple locations between Delta Junction and the Alaska-Yukon border, including fault crossings; and
- The Upper Tanana region near Tetlin.

Yellow highlighting is used throughout this preliminary draft Resource Report to highlight selected information that is pending or subject to change.

DRAFT

[1] The Alaska Pipeline Project is referred to herein as either APP or the Project.

TABLE OF CONTENTS

1.0 RESOURCE REPORT 1 – GENERAL PROJECT DESCRIPTION 1-1
1.1 PROJECT OVERVIEW 1-1
1.2 PROJECT PURPOSE AND NEED 1-4
1.3 LOCATION AND DESCRIPTION OF FACILITIES 1-4
1.3.1 Pipeline Facilities 1-5
1.3.1.1 Point Thomson Gas Transmission Pipeline 1-5
1.3.1.2 Alaska Mainline 1-7
1.3.2 Aboveground Facilities 1-10
1.3.2.1 Gas Treatment Plant 1-10
1.3.2.2 Pipeline Aboveground Facilities 1-11
1.3.3 Associated Infrastructure 1-16
1.3.3.1 Gas Treatment Plant 1-16
1.3.3.2 Pipeline Facilities 1-17
1.4 LAND REQUIREMENTS 1-25
1.4.1 Pipeline Facilities 1-27
1.4.2 Aboveground Facilities 1-28
1.4.2.1 Gas Treatment Plant 1-28
1.4.2.2 Pipeline Aboveground Facilities 1-29
1.4.3 Associated Infrastructure 1-32
1.4.3.1 Gas Treatment Plant 1-32
1.4.3.2 Pipeline Facilities 1-33
1.5 CONSTRUCTION SCHEDULE 1-37
1.5.1 GTP Site Preparation 1-38
1.5.2 GTP Site Construction 1-38
1.5.3 Pipeline Construction 1-40
1.6 CONSTRUCTION ACTIVITIES 1-40
1.6.1 Logistics 1-40
1.6.1.1 Seasonal Ice-Window Open and Close Dates 1-42
1.6.1.2 Haul Road Truck Traffic 1-42
1.6.1.3 Barge Traffic and Whaling 1-42
1.6.2 Typical Pipeline Construction Procedures 1-42
1.6.2.1 Surveying 1-42
1.6.2.2 Clearing 1-44
1.6.2.3 Grading 1-44
1.6.2.4 Ice and Snow Work Pads and Access Roads 1-45
1.6.2.5 Erosion Control on the Right-of-Way During Construction 1-46
1.6.2.6 Stringing 1-47
1.6.2.7 Bending 1-47
1.6.2.8 Production Welding 1-47
1.6.2.9 Joint Coating 1-47
1.6.2.10 Trenching 1-48
1.6.2.11 Lowering In, Tie-ins, and Backfilling 1-48
1.6.2.12 Testing and Final Tie-Ins 1-48
1.6.2.13 Cleanup and Rehabilitation 1-49
1.6.3 Special Pipeline Construction Procedures 1-49
1.6.3.1 Wetland Crossings 1-49

DRAFT

1.6.3.2 Waterbody Crossings 1-50
1.6.3.3 Road and Highway Crossings....1-57
1.6.3.4 Trans Alaska Pipeline System, Utility and Other Pipeline Crossings 1-58
1.6.3.5 Proximity to Highways, Major Roads, TAPS, and Other Pipelines and Parallel Utilities....1-59
1.6.3.6 Longitudinal and Cross Slopes 1-59
1.6.3.7 Geologic Faults 1-60
1.6.3.8 Agricultural Land....1-61
1.6.3.9 Residential, Commercial, and Industrial Areas 1-61
1.6.3.10 Pipeline Construction in Permafrost....1-62
1.6.3.11 Blasting 1-63
1.6.3.12 Contaminated Soils 1-63
1.6.4 Aboveground Facility Construction Procedures 1-63
1.6.4.1 Gas Treatment Plant 1-63
1.6.4.2 Compressor Stations 1-64
1.6.4.3 Custody Transfer Meter Stations 1-64
1.6.4.4 Mainline Block Valves and Launchers and Receivers....1-65
1.6.5 Infrastructure Construction 1-65
1.6.5.1 Gravel Pads....1-65
1.6.5.2 Borrow Sites 1-66
1.6.5.3 Access Roads 1-66
1.6.6 Construction Workforce 1-66
1.7 ENVIRONMENTAL COMPLIANCE, TRAINING, AND INSPECTION 1-67
1.7.1 Environmental Compliance....1-67
1.7.2 Environmental Training....1-67
1.7.3 Environmental Inspection 1-67
1.8 OPERATION AND MAINTENANCE PROCEDURES....1-68
1.8.1 Pipeline and Aboveground Facility Operations 1-68
1.8.1.1 Pipelines, Meter Stations, and Compressor Stations 1-68
1.8.1.2 Gas Treatment Plant 1-68
1.8.1.3 Emergency Response 1-68
1.8.2 Right-of-Way Monitoring and Maintenance....1-69
1.8.2.1 Integrated Public Awareness Program....1-69
1.8.2.2 Pipeline Patrol and Leak Detection....1-69
1.8.2.3 Right-of-Way Maintenance 1-69
1.8.3 Pipeline Integrity Management 1-69
1.8.3.1 Pipeline Integrity Management Program....1-69
1.8.4 Aboveground Facility Maintenance....1-71
1.8.4.1 Meter Stations, Compressor Stations, and Mainline Block Valves 1-71
1.8.4.2 Gas Treatment Plant 1-71
1.8.5 Operations Workforce....1-71
1.9 NON-JURISDICTIONAL FACILITIES....1-72
1.10 FUTURE PLANS AND ABANDONMENT....1-72
1.11 PERMITS AND APPROVALS....1-72
1.12 AGENCY, PUBLIC, AND OTHER STAKEHOLDER COMMUNICATIONS....1-74
1.12.1 Public Open Houses and Community Outreach Meetings 1-76

DRAFT

1.12.2 Agency Meetings 1-78
1.13 REFERENCES 1-81

LIST OF TABLES

Table 1.1-1 Resource Report 1 Filing Requirements Checklist 1-3
Table 1.3.1-1 Location of Proposed Alaska Pipeline 1-5
Table 1.3.1-2 Collocated Rights-of-Way with the Alaska Pipeline Project – Point Thomson Gas Transmission Pipeline 1-6
Table 1.3.1-3 Collocated Rights-of-Way with the Alaska Pipeline Project – Alaska Mainline 1-7
Table 1.3.1-4 Major Potentially Active Fault Crossings 1-9
Table 1.3.2-1 Aboveground Facilities Associated with the Pipeline 1-11
Table 1.3.3-1 Access Road Characteristics by Type and Typical Use 1-19
Table 1.3.3-2 Modified and New Access Roads Associated with the Pipeline 1-19
Table 1.3.3-3 Helipads Associated with the Pipeline 1-20
Table 1.3.3-4 Airstrips Associated with the Pipeline 1-21
Table 1.3.3-5 Locations Associated with the Pipeline: Construction Camps, Pipe Storage Areas, and Contractor Yards 1-23
Table 1.4-1 Summary of Land Requirements and Impacts 1-25
Table 1.4.1-1 Typical Construction Right-of-Way Configurations 1-28
Table 1.4.2-1 Gas Treatment Plant Infrastructure Requirements 1-28
Table 1.4.2-2 Summary of Construction and Operation Impacts of Aboveground Facilities Associated with the Pipeline 1-29
Table 1.4.3-1 Impacts Associated with Dock Modifications 1-33
Table 1.4.3-2 Typical Additional Temporary Workspace Dimensions Associated with the Pipeline 1-33
Table 1.4.3-3 Land Requirements and Impacts at Modified and New Access Roads Associated with the Pipeline 1-35
Table 1.4.3-4 Preliminary List of Land Requirements and Impacts at Construction Camps, Pipe Storage Areas, and Contractor Yards Associated with the Pipeline 1-36
Table 1.6.1-1 Summary of Material and Equipment Transported to Construction Sites 1-41
Table 1.6.3-1 Preliminary List of Horizontal Directional Drill Crossing Locations 1-54
Table 1.6.3-2 Major Road Crossings 1-57
Table 1.6.3-3 TransAlaska Pipeline System, Utility, and Other Pipeline Crossings 1-58
Table 1.6.3-4 Right-of-Way Cross Slopes and Planned Construction Methods 1-59
Table 1.6.3-5 Construction Right-of-Way Width-Reduction Measures for Cross Slopes 1-60
Table 1.11-1 Major Authorizations 1-73
Table 1.12-1 Environmental Issues Identified During Stakeholder Outreach and Scoping 1-75
Table 1.12.1-1 Summary of Public Open Houses and Stakeholder Meetings 1-77
Table 1.12.2-1 Summary of Agency Meetings Through March 15, 2011 1-78

DRAFT

LIST OF FIGURES

Figure 1.1-1 Overview of the Proposed Alaska Pipeline Project 1-2
Figure 1.5-1 Preliminary APP Construction Schedule 1-39
Figure 1.6.2-1 Typical Pipeline Construction Sequence 1-43

APPENDICES

Appendix 1A U.S. Geological Survey Topographic-based Corridor Maps
Appendix 1B Aboveground Facility Location Maps and Typical Plot Plans
Appendix 1C Highway and Pipeline Proximity Tables
Appendix 1D Table of Additional Temporary Workspace by Milepost
Appendix 1E Typical Drawings
Appendix 1F Table Summarizing Distances to Borrow Sites
Appendix 1G Rationale for the Width of the Construction Right-of-Way
Appendix 1H Table of Construction Rights-of-Way by Milepost
Appendix 1I Alaska Pipeline Project's Upland Erosion Control, Revegetation, and Maintenance Plan
Appendix 1J Alaska Pipeline Project's Wetland and Waterbody Construction and Mitigation Procedures
Appendix 1K Agency Correspondence
Appendix 1L Affected Landowner Names and Addresses *[Contains Privileged Information – Filed Under Separate Cover]*

DRAFT

List of Acronyms and Abbreviations

§	Section
°F	degrees Fahrenheit
ADEC	Alaska Department of Environmental Conservation
ADFG	Alaska Department of Fish and Game
ADHS&EM	Alaska Division of Homeland Security and Emergency Services
ADNR	Alaska Department of Natural Resource
ADOTPF	Alaska Department of Transportation and Public Facilities
ADPS	Alaska Department of Public Safety
AGIA	Alaska Gasline Inducement Act
AMP	Alaska Mainline milepost
ANGPA	Alaska Natural Gas Pipeline Act of 2004
ANILCA	Alaska National Interest Lands Conservation Act
ANS	Alaska North Slope
API	American Petroleum Institute
APP	Alaska Pipeline Project
APP Plan	APP Upland Erosion Control, Revegetation, and Maintenance Plan
APP Procedures	APP Wetland and Waterbody Construction and Mitigation Procedures
ASPCO	Alaska State Pipeline Coordinator's Office
ATWS	additional temporary workspace
Bcfd	billion cubic feet per day
BLM	U.S. Bureau of Land Management
Certificate	Certificate of Public Convenience and Necessity
CFR	Code of Federal Regulations
CGF	Central Gas Facility
CO_2	carbon dioxide
COE	U.S. Army Corps of Engineers
CPS	cathodic-protection system
DGGS	Division of Geological and Geophysical Survey
DH-2	Dock Head 2 (West Dock at Prudhoe Bay)
DH-3	Dock Head 3 (West Dock at Prudhoe Bay)
DOD	U.S. Department of Defense
DOT	U.S. Department of Transportation
EI	Environmental Inspector
EPA	U.S. Environmental Protection Agency
FERC	U.S. Federal Energy Regulatory Commission
FWS	U.S. Fish and Wildlife Service
GTP	Gas Treatment Plant
GVP	geotechnical verification program
HDD	horizontal directional drill
ILI	in-line inspection
MAOP	maximum allowable operating pressure
MLBV	mainline block valve
MP	milepost
MPRSA	Marine Protection, Research, and Sanctuaries Act

DRAFT

NEPA	National Environmental Policy Act
NGA	Natural Gas Act
NMFS	National Marine Fisheries Service
NSA	Noise Sensitive Areas
NSB	North Slope Borough
NWR	National Wildlife Refuge
OFC	Office of the Federal Coordinator
PBU	Prudhoe Bay Unit
PHMSA	Pipeline & Hazardous Materials Safety Administration
PMP	Point Thomson Gas Transmission Pipeline milepost
psig	pounds per square inch gauge
PTGP	Point Thomson Gas Transmission Pipeline
PTP	Point Thomson Project
PTU	Point Thomson Unit
Put-23	Putuligayuk-23 (mine)
RCA	Regulatory Commission of Alaska
SHPO	State Historic Preservation Office
TAPS	Trans-Alaska Pipeline System
TSDF	Treatment Storage and Disposal Facility
USAF	U.S. Air Force
USFS	U.S. Forest Service
USGS	U.S. Geological Survey

DRAFT

1.0 RESOURCE REPORT 1 – GENERAL PROJECT DESCRIPTION

1.1 PROJECT OVERVIEW

TransCanada Alaska Company, LLC and Foothills Pipe Lines, Ltd., working cooperatively with ExxonMobil, are collectively developing a project to treat, transport, and deliver gas from the Alaska North Slope (ANS) to markets in North America, the Alaska Pipeline Project (APP or Project). This draft resource report pertains only to that portion of the project in Alaska. Unless the context otherwise requires, references in the resource reports to APP refer only to the Alaska portion of the project. As shown on Figure 1.1-1, APP will comprise the following major jurisdictional components[1] in Alaska:

- About 58.3 miles of buried 32-inch-diameter Point Thomson Gas Transmission Pipeline (PTGP) [2] and associated aboveground, ancillary, and auxiliary facilities from the processing facilities at the Point Thomson field to a gas treatment plant (GTP);
- A GTP near Prudhoe Bay, Alaska, that would process gas from the existing Central Gas Facility (CGF) near Prudhoe Bay and from the Point Thomson field to deliver up to 4.5 billion cubic feet per day (bcfd) of residue gas, depending on final subscriptions and gas source; and
- About 744.5 miles of buried 48-inch-diameter Alaska Mainline and associated aboveground, ancillary, and auxiliary facilities from a GTP to the Alaska-Yukon border, including provisions for gas delivery points within Alaska.

As part of the project, APP will also construct in Alaska eight compressor stations, two meter stations, various mainline block valves (MLBVs), and pig launcher and receiver facilities; and associated ancillary and auxiliary infrastructure such as additional temporary workspace (ATWS), access roads, helipads, construction camps, pipe storage areas, contractor yards, borrow sites, and dock modifications. APP will also use existing airstrips.

As required by Title 18 CFR Section 380.12, APP has prepared this resource report in support of its application to the U.S. Federal Energy Regulatory Commission (FERC) for a Certificate of Public Convenience and Necessity (Certificate) under Section 7(c) of the Natural Gas Act (NGA) and consistent with the Alaska Natural Gas Pipeline Act of 2004.

DRAFT

[1] In previous FERC filings, the PTGP was referred to as Zone 1, the GTP was referred to as Zone 2, and the Alaska Mainline was referred to as Zone 3 of the Alaska-Canada Pipeline.

[2] Also referred to as the Point Thomson Gas Pipeline on maps, figures, and illustrations. The origin of the PTGP is assumed to be located at the outlet of the Point Thomson Processing Facility at Point Thomson based on input from the Point Thomson field operator. The final length may vary depending on the final gas development plan for Point Thomson.

LEGEND

- Proposed Route Milepost
- AMP Alaska Mainline Milepost
- PMP Point Thomson Gas Pipeline Milepost
- Facility
- Populated Place
- Proposed Alaska Mainline
- Proposed Point Thomson Gas Pipeline
- Highway
- River / Lake
- Park or Protected Area

0 25 50 75 100 Miles

Figure 1.1-1
US-00-039-000
Alaska Pipeline Project
Project Overview

Rev: F

Filing Requirements Checklist

Table 1.1-1 lists the FERC's filing requirements from Title 18 of the CFR § 380.12 that are applicable to Resource Report 1, and lists the locations where each requirement is addressed in this resource report.

TABLE 1.1-1

Alaska Pipeline Project
Resource Report 1 Filing Requirements Checklist

	Requirements	Where Found in Document
1.	Provide a detailed description and location map of the Project facilities. (§ 380.12[c][1]). • Include all pipeline and aboveground facilities; • Include support areas for construction or operation; and • Identify facilities to be abandoned.	Sections 1.3, 1.4, and 1.10
2.	Describe any non-jurisdictional facilities that would be built in association with the Project (§ 380.12[c][2]). • Include auxiliary facilities (§ 2.55[a]); • Describe the relationship to the jurisdictional facilities; • Include ownership, land requirements, gas consumption, megawatt size, construction status, and an update of the latest status of federal, state, and local permits/approvals; • Include the length and diameter of any interconnecting pipeline; and • Apply the four-factor test to each facility (§ 380.12[c][2][ii]).	Section 1.9
3.	Provide current original U.S. Geological Survey (USGS) 7.5-minute series topographic maps with mileposts showing the Project facilities (§ 380.12[c][3]). • Maps of equivalent detail are acceptable if legible (check with staff); • Show locations of all linear project elements, and label them; and • Show locations of all significant aboveground facilities, and label them.	Appendix 1A
4.	Provide aerial images or photographs or alignment sheets based on these sources with mileposts showing Project facilities. (§ 380.12[c][3]) • No more than 1-year-old (unless older images accurately depict current land use and development); and • Scale no smaller than 1:6,000.	Appendix 1A [Note: To be provided in Draft Report]
5.	Provide plot/site plans of compressor stations showing the location of the nearest noise sensitive areas (NSAs) within 1 mile (§380.12[c][3,4]). • Scale no smaller than 1:3,600; and • Show reference to topographic maps and aerial alignments provided above.	Typical plot plan and site location maps addressing NSAs provided in Appendix 1B [Note: Maps and plot plans to be provided in Draft Report]
6.	Describe construction and restoration methods. (§ 380.12[c][6]) • Include this information by milepost.	Section 1.6
7.	Identify the permits required for construction. (§ 380.12[c][9]) • Include the status of all permits.	Table 1.11-1 in Section 1.11
8.	Describe future expansion plans. (§ 380. 12[c][8])	Section 1.10
9.	Provide the names and addresses of all affected landowners and certify that all affected landowners would be notified as required in § 157.6(d). (§ 380.12[c][10]) • Affected landowners are defined in § 157.6(d); and • Provide an electronic copy directly to the environmental staff.	Appendix 1L

DRAFT

TABLE 1.1-1

Alaska Pipeline Project
Resource Report 1 Filing Requirements Checklist

Requirements	Where Found in Document
Additional Information	
Describe all authorizations required to complete the proposed action and the status of applications for such authorizations.	Table 1.11-1
Provide plot/site plans of all other aboveground facilities that are not completely within the right-of-way.	Appendix 1B [Note: Maps and plot plans to be provided in Draft Report]
Provide detailed typical construction right-of-way cross-section diagrams showing information such as widths and relative locations of existing rights-of-way, new permanent right-of-way, and temporary construction right-of-way (to be provided in Resource Report 8).	Appendix 1E
Summarize the total acreage of land affected by construction and operation of the project.	Section 1.4
If Resource Report 5, Socioeconomics, is not provided, provide the start and end dates of construction, the number of pipeline spreads that would be used, and the workforce per spread.	Section 1.6.6
Send two additional copies of topographic maps and aerial images/photographs directly to the environmental staff of the Office of Energy Projects.	Appendix 1A

1.2 PROJECT PURPOSE AND NEED

The purpose of the APP is to provide reliable transportation of natural gas from ANS to Alaska-Yukon border. The need for the project is to deliver this gas to markets in North America. APP will be constructed pursuant to the Alaska Natural Gas Pipeline Act of 2004 (ANGPA). Congress recognized in ANGPA that construction of a natural gas pipeline from the ANS to the contiguous United States is in the national interest and would enhance national energy security by providing access to the significant gas reserves in Alaska to meet anticipated future demand for natural gas. Congress mandated the expedited processing by the FERC of any application for an Alaska natural gas transportation project. Therefore, in ANGPA, Congress made the following statutory findings: there is a public need to construct and operate the proposed Alaska natural gas transportation project, and sufficient downstream capacity will exist to transport the Alaska natural gas moving through the project to markets in the contiguous United States.

To assist in fulfilling ANGPA's intent, the proposed Alaska Mainline segment of APP will connect to the Canadian Section of the Project at the Alaska-Yukon border. The location of the international border interconnect is fixed by the fact that the Project already has a certificated route in Canada. The location of this interconnect has resulted in the present routing decisions for the southern end of the Alaska portion of the APP.

1.3 LOCATION AND DESCRIPTION OF FACILITIES

APP will involve construction and operation of a GTP and natural gas pipeline system and related aboveground, ancillary, and auxiliary facilities. The pipeline system will consist of two segments: The PTGP between the Point Thomson field to the GTP, and the Alaska Mainline between the GTP and the Alaska-Yukon border, as discussed in Section 1.3.1. Aboveground facilities including the GTP, eight compressor stations, two meter stations, and various MLBVs, pig launchers, pig receivers, intermediate gas delivery points, and cathodic protection facilities are discussed in Section 1.3.2. Other associated infrastructure required for APP including ATWS, access roads, helipads, airstrips, construction camps, pipe storage areas, contractor yards, borrow sites, and dock modifications are discussed in Section 1.3.3. Detailed facility and

DRAFT

site land use requirements and construction and operational land use impacts associated with the project are discussed in Section 1.4.

An overview map of the project's location and facilities is provided on Figure 1.1-1. Detailed pipeline corridor and major facility locations are depicted on U.S. Geological Survey (USGS) maps, provided in Appendix 1A. [Note: Aerial photo-based alignment sheets at scale of 1:6,000 will be provided with the final application.] Aboveground facility location maps and plot plans are provided in Appendix 1B. [Note: To be provided in the Draft Report.]

Mileposts (MPs) are commonly used markers along linear projects, such as APP. To distinguish the PTGP from the Alaska Mainline, APP has prefixed its MP identifier with a PTGP MP (PMP) or an Alaska Mainline MP (AMP). This convention is used throughout APP's application to identify resources and features along the proposed pipeline route.

1.3.1 PIPELINE FACILITIES

New pipeline facilities associated with APP will consist of a 32-inch-diameter natural gas pipeline referred to as the PTGP, and a 48-inch-diameter natural gas pipeline referred to as the Alaska Mainline. APP will use temporary workspace for construction of the pipelines and will retain a permanent right-of-way for operation of the pipelines. Table 1.3.1-1 provides a summary of the proposed APP pipeline facilities, including the pipeline diameters, approximate mileposts, and lengths located within the Boroughs and Census Areas that will be crossed. Information on land requirements needed for the pipeline facilities is provided in Section 1.4.

TABLE 1.3.1-1

Alaska Pipeline Project
Location of Proposed Alaska Pipeline

Segment/Borough or Census Area	Pipeline Diameter (inches)	Mileposts [a]	Length (miles)
POINT THOMSON GAS TRANSMISSION PIPELINE			
North Slope Borough	32	[TBD]	58.3
ALASKA MAINLINE			
North Slope Borough	48	[TBD]	[TBD]
Yukon–Koyukuk Census Area	48	[TBD]	[TBD]
Fairbanks North Star Borough	48	[TBD]	[TBD]
Tanana–Tetlin Census Area	48	[TBD]	[TBD]
Subtotal			744.5
GRAND TOTAL			802.8

[a] PMP = Point Thomson Gas Transmission Pipeline milepost, AMP = Alaska Mainline milepost

1.3.1.1 Point Thomson Gas Transmission Pipeline

The proposed PTGP will begin at PMP 0, immediately downstream of the processing facilities at the Point Thomson Unit[3] (PTU), and will end at PMP 58.3, at the GTP (see Figure 1.1-1). The

[3] Point Thomson is located about 60 miles east of the proposed gas treatment plant (GTP). Point Thomson is a defined development area overlaying a high-pressure hydrocarbon reservoir that would be developed by the unit-operator, ExxonMobil.

DRAFT

route will traverse continuous permafrost in the relatively flat ANS coastal plain for the length of its route. The proposed PTGP route will cross a proposed Point Thomson Project (PTP) pipeline[4] from north to south, near the PTU, remaining south of the PTP pipeline. The proposed route will continue west across the coastal floodplain, generally parallel to and south of the Badami pipeline for about a fourth of its length. The proposed route will continue to the west, crossing the Endicott Pipeline, the Sagavanirktok West Channel, and the Putuligayuk River, to its endpoint at the GTP. The proposed route is generally constrained to the south by the oil pipelines along the coast (i.e., APP will avoid multiple crossings of those oil pipelines). The PTGP will be buried for its entire length and will not cross active faults.

Approximately 24 percent of the PTGP will be collocated with other pipeline rights-of-way (see Table 1.3.1-2). Appendix 1A depicts the PTGP route on USGS topographic maps and Appendix 1C provides detailed information regarding the pipeline's proximity to existing rights-of-way by PMP.

TABLE 1.3.1-2

Alaska Pipeline Project
Collocated Rights-of-Way with the Alaska Pipeline Project – Point Thomson Gas Transmission Pipeline [a]

Category/Facility	Length (miles)
OVERLAPPING EXISTING RIGHTS-OF-WAY (0 TO 100 FEET) [b]	
Trans-Alaska Pipeline System	–
Other Pipeline	0.4
Highways or Major Roads	–
ABUTTING/MINIMAL OFFSET (100 TO 250 FEET) [b]	
Trans-Alaska Pipeline System	–
Other Pipeline	2.2
Highways or Major Roads	–
OFFSET EXISTING RIGHTS-OF-WAY (250 TO 500 FEET) [b]	
Trans-Alaska Pipeline System	–
Other Pipeline	11.6
Highways or Major Roads	–
GRAND TOTAL	14.1

[a] Source data provided in Appendix 1C, Table 1C-2. In all cases, the totals shown in this table may not equal the sum due to rounding.
[b] [Note: These dimension ranges will be verified in the Draft Report.]

The 32-inch-diameter PTGP will be designed for an annual average receipt capacity of 1.1 bcfd with a maximum allowable operating pressure (MAOP) of 1,130 pounds per square inch gauge (psig). A custody transfer meter station will be located at the Point Thomson field processing facilities. The pipeline will be constructed of grade American Petroleum Institute (API) X65 steel pipe with a minimum nominal wall thickness of 0.348 inch. The natural gas in the pipeline will be cooled to a temperature below freezing to minimize impact on the surrounding permafrost. The PTGP will cross public lands managed by the State of Alaska.

[4] The Point Thomson Project pipeline is a 10,000 barrel per day light oil/condensate (liquids) pipeline that is currently under regulatory review by the U.S. Army Corps of Engineers.

DRAFT

1.3.1.2 Alaska Mainline

The Alaska Mainline will begin at AMP 0 at the proposed GTP in the Prudhoe Bay Unit (PBU) and traverse approximately 745 miles to its endpoint at the international border between Alaska and Yukon (see Figure 1.1-1). The Alaska Mainline will be located within four boroughs and census areas: the North Slope Borough, the Yukon-Koyukuk census area (area between the North Slope Borough and the Fairbanks North Star Borough), the Fairbanks North Star Borough, and the Tanana-Tetlin census area (area between the Fairbanks North Star Borough and the Canadian border) (see Table 1.3.1-1).

The proposed Alaska Mainline route will generally follow the Trans Alaska Pipeline System (TAPS) and adjacent highways "infrastructure corridor" southeast to near Delta Junction, Alaska. From there, the proposed route will diverge from the TAPS route and continue southeast, generally following the Alaska Highway to the Alaska-Yukon border. The pipeline will cross areas of both continuous and discontinuous permafrost. Table 1.3.1-3 summarizes the lengths of the Alaska Mainline that are collocated with highway, major road, TAPS, and other pipeline rights of way. Appendix 1C contains more detailed information regarding the pipeline's proximity to existing rights-of-way by AMP.

TABLE 1.3.1-3

Alaska Pipeline Project
Collocated Rights-of-Way with the Alaska Pipeline Project – Alaska Mainline [A]

Category/Facility	Length (miles) [b]
NORTH SLOPE BOROUGH	
OVERLAPPING EXISTING RIGHTS-OF-WAY (0 TO 100 FEET)[c]	
Trans-Alaska Pipeline System	[TBD]
Other Pipeline	[TBD]
Highways or Major Roads	[TBD]
ABUTTING OR MINIMAL OFFSET (100 TO 250 FEET)[c]	
Trans-Alaska Pipeline System	[TBD]
Other Pipeline	[TBD]
Highways or Major Roads	[TBD]
OFFSET EXISTING RIGHTS-OF-WAY (250 TO 500 FEET)[c]	
Trans-Alaska Pipeline System	[TBD]
Other Pipeline	[TBD]
Highways or Major Roads	[TBD]
Subtotal (Approximate)	240
YUKON-KOYUKUK CENSUS AREA	
OVERLAPPING EXISTING RIGHTS-OF-WAY (0 TO 100 FEET)[c]	
Trans-Alaska Pipeline System	[TBD]
Other Pipeline	[TBD]
Highways or Major Roads	[TBD]
ABUTTING OR MINIMAL OFFSET (100 TO 250 FEET)[c]	
Trans-Alaska Pipeline System	[TBD]
Other Pipeline	[TBD]
Highways or Major Roads	[TBD]
OFFSET EXISTING RIGHTS-OF-WAY (250 TO 500 FEET)[c]	
Trans-Alaska Pipeline System	[TBD]

DRAFT

TABLE 1.3.1-3

Alaska Pipeline Project
Collocated Rights-of-Way with the Alaska Pipeline Project – Alaska Mainline [A]

Category/Facility	Length (miles) [b]
Other Pipeline	[TBD]
Highways or Major Roads	[TBD]
Subtotal (Approximate)	185
FAIRBANKS NORTH STAR BOROUGH	
OVERLAPPING EXISTING RIGHTS-OF-WAY (0 TO 100 FEET) [c]	
Trans-Alaska Pipeline System	[TBD]
Other Pipeline	[TBD]
Highways or Major Roads	[TBD]
ABUTTING OR MINIMAL OFFSET (100 TO 250 FEET) [c]	
Trans-Alaska Pipeline System	[TBD]
Other Pipeline	[TBD]
Highways or Major Roads	[TBD]
OFFSET EXISTING RIGHTS-OF-WAY (250 TO 500 FEET) [c]	
Trans-Alaska Pipeline System	[TBD]
Other Pipeline	[TBD]
Highways or Major Roads	[TBD]
Subtotal (Approximate)	25
TANANA-TETLIN CENSUS AREA	
OVERLAPPING EXISTING RIGHTS-OF-WAY (0 TO 100 FEET) [c]	
Trans-Alaska Pipeline System	[TBD]
Other Pipeline	[TBD]
Highways or Major Roads	[TBD]
ABUTTING OR MINIMAL OFFSET (100 TO 250 FEET) [c]	
Trans-Alaska Pipeline System	[TBD]
Other Pipeline	[TBD]
Highways or Major Roads	[TBD]
OFFSET EXISTING RIGHTS-OF-WAY (250 TO 500 FEET) [c]	
Trans-Alaska Pipeline System	[TBD]
Other Pipeline	[TBD]
Highways or Major Roads	[TBD]
Subtotal (Approximate)	70
GRAND TOTAL	520

[a] Source data is provided in Appendix 1C, Table 1C-1. [Note: To be provided in the Draft Report.]
[b] The length totals may be greater than the corresponding length of the pipeline because the pipeline may be collocated with more than one existing facility.
[c] [Note: These dimension ranges will be verified in the Draft Report.]

DRAFT

The 48-inch-diameter Alaska Mainline will be designed for an annual average receipt capacity of approximately 4.0 to 4.5 bcfd with a MAOP of 2,500 psig. A custody transfer meter station will be located at the GTP, eight compressor stations will be located along the pipeline at intervals of about 75 to 100 miles, and provision will be made for a minimum of five potential intermediate gas delivery points in Alaska. The pipeline will be constructed of grade API X80 steel pipe with a minimum nominal wall thickness of 0.932 inch. North of the Brooks Range, the natural gas in the pipeline will be cooled to below freezing to minimize impact on the continuous permafrost. For stations located south of the Brooks Range, seasonal variation in station discharge gas temperature will range from about 25°F in the winter to about 45°F in the summer, resulting in an annual average temperature between 30°F to 35°F.

The Alaska Mainline will cross federally managed lands (~34 percent), state-managed lands (~35 percent), other agency/borough/city lands (~5 percent), and private lands (~26 percent). Section 8.X of Resource Report 8 will include a breakdown by MP of public lands crossed.

APP may decide not to bury the Alaska Mainline in locations of major potentially active seismic activity (i.e., active fault crossings). A design mitigation for major potentially active fault crossings is to elevate the pipeline above ground to isolate the pipeline from potential ground movements. Each above-ground crossing of a major potentially active fault will be an elevated pipeline section supported by an at-grade beam with sliding saddles. The at-grade beam will be supported on a gravel pad and, within the length of the above-ground section, the pipe will have expansion loops. Major potentially active fault crossings along the Alaska Mainline have been identified in Table 1.3.1-4 along with the approximate AMP location and Borough or Census Area. Typical fault crossing drawings are included in Appendix 1E.

TABLE 1.3.1-4

Alaska Pipeline Project
Major Potentially Active Fault Crossings

Borough or Census Area/Fault Name	Approximate Location of Fault or Zone (AMP)
NORTH SLOPE BOROUGH	
None	[TBD]
YUKON-KOYUKUK CENSUS AREA	
Yukon River	[TBD]
Isom Creek (Kaltag-Tintina Fault Zone - Tozitna Fault)	[TBD]
Erickson Creek (Kaltag-Tintina Fault Zone - Victoria Creek Fault)	[TBD]
FAIRBANKS NORTH STAR BOROUGH	
None	[TBD]
TANANA-TETLIN CENSUS AREA	
Blair Hills - Clear Creek Fault	[TBD]
Sears Creek	[TBD]
Dot T Johnson West 1	[TBD]
Dot T Johnson West 2	[TBD]
Dot T Johnson West 3	[TBD]
Dot T Johnson East	[TBD]
Billy Creek	[TBD]
Bear Creek	[TBD]
Cathedral Rapids West 1	[TBD]
Cathedral Rapids West 2	[TBD]
Cathedral Rapids East	[TBD]

DRAFT

APP may construct aerial span crossings at waterbody crossings that cannot be trenched or crossed by other methods. [Note: Potential locations for aerial crossings are under evaluation. After field data relevant to the design and construction methods for each waterbody crossing have been acquired and analyzed, these locations will be identified and further defined in the Draft Report.]

1.3.2 ABOVEGROUND FACILITIES

1.3.2.1 Gas Treatment Plant

The APP will include the installation and operation of a GTP. The GTP will be constructed and operated at Prudhoe Bay on the ANS near the Beaufort Sea coast (see Figure 1.1-1). Section 1.4.2.1 describes the land requirements associated with the GTP site. The GTP will be designed to treat and condition gas received from various producers and deliver this gas to the Alaska Mainline. The GTP will receive gas from the PTGP and the nearby existing CGF. The GTP will deliver approximately up to 4.5 bcfd of sales quality gas, depending on final subscriptions and gas source.

The GTP site will be located on state land within the North Slope Borough. The site is located entirely within the PBU.

The GTP will receive gas via PTGP and inlet feed lines from the CGF. The product streams from the GTP will be delivered to two outlet lines: sales quality gas to the Alaska Mainline and the CO_2 stream to a CGF return line. Connection points for all inlet gas and outlet product lines will be made at the GTP battery limit (GTP property line).

The GTP will use four identical sets of equipment (known as trains) to remove CO_2, hydrogen sulfide, and moisture from the raw gas for conditioning the natural gas to sales quality. Each train will compress the gas, after which it will be routed to a propane refrigeration system where it will be chilled to 30 degrees Fahrenheit (°F). After refrigeration, the gas will be delivered to the Alaska Mainline at 2,500 psig.

In addition to the processing trains, the GTP site will consist of several auxiliary facilities and systems to support construction and operation activities. These will include:

- A GTP warehouse to store goods, materials, and spare parts;
- A cold-storage pad for spare parts and storage of materials that are not sensitive to ambient weather conditions;
- A process and plant maintenance shop that will accommodate personnel and equipment for plant preventative and corrective maintenance services;
- A vehicle maintenance facility that supports preventative maintenance and unscheduled repair activities;
- Drain systems that include open drain and closed drain systems that will be routed to injection wells on the GTP site;
- A dedicated APP operated water reservoir and transfer line system to provide raw water to the GTP for various uses including firewater and process water. A water treatment facility will be situated at the GTP site to provide potable water for personnel use;
- Plant sanitary wastewater and treatment systems;

DRAFT

- On-site power generation to accommodate normal, essential, and emergency power needs;
- Flare systems to protect the facility from overpressure and unplanned events; and
- Outlet meter for carbon dioxide (CO_2) stream.

Most equipment requiring frequent access for operations and maintenance will be enclosed to shelter personnel from the Arctic weather elements. Power required for GTP construction on West Dock will also be supplied by a GTP owned and operated temporary power generator module.

In addition to the facilities and systems described above, solid waste generated by the GTP will be transported to, and disposed of at, existing approved and permitted waste management facilities located on the ANS. No new waste management facilities will be constructed for or by the GTP. There is no U.S. Environmental Protection Agency identified Resource Conservation and Recovery Act-permitted Treatment Storage and Disposal Facility (TSDF) for hazardous waste within the State of Alaska. Therefore, APP will timely ship any hazardous waste generated through use of a licensed hazardous waste transporter via road, barge, or air, to an approved TSDF in the Lower 48.

1.3.2.2 Pipeline Aboveground Facilities

In addition to the proposed pipelines, APP will include the installation and operation of eight compressor stations, two meter stations, fifty-two MLBVs, five launchers, four receivers, and a minimum of five potential intermediate gas delivery points in Alaska. Of these, one meter station, four MLBVs, one launcher, and one receiver will be associated with the PTGP; the remainder will be located along the Alaska Mainline. The locations of aboveground facilities associated with APP are provided in Table 1.3.2-1.

TABLE 1.3.2-1

Alaska Pipeline Project
Aboveground Facilities Associated with the Pipeline [a]

Pipeline/Facility Type/Facility Name	Milepost [b]	Borough or Census Area
POINT THOMSON GAS TRANSMISSION PIPELINE		
METER STATIONS		
Point Thomson Unit (PTU) Meter Station	[TBD]	North Slope Borough
MAINLINE BLOCK VALVES (MLBVS)		
MLBV-PT1 (at PTU Meter Station)	[TBD]	North Slope Borough
MLBV-PT2	[TBD]	North Slope Borough
MLBV-PT3	[TBD]	North Slope Borough
MLBV-PT4 (at Gas Treatment Plant (GTP))	[TBD]	North Slope Borough
LAUNCHERS AND RECEIVERS		
Launcher (at PTU Meter Station)	[TBD]	North Slope Borough
Receiver (at GTP)	[TBD]	North Slope Borough
ALASKA MAINLINE		
COMPRESSOR STATIONS		
Happy Valley Compressor Station	[TBD]	North Slope Borough
Galbraith Lake Compressor Station	[TBD]	North Slope Borough
Chapman Creek Compressor Station	[TBD]	Yukon-Koyukuk Census Area
Fort Hamlin Hills Compressor Station	[TBD]	Yukon-Koyukuk Census Area

DRAFT

TABLE 1.3.2-1

Alaska Pipeline Project
Aboveground Facilities Associated with the Pipeline [a]

Pipeline/Facility Type/Facility Name	Milepost [b]	Borough or Census Area
Tatalina River Compressor Station	[TBD]	Yukon-Koyukuk Census Area
Johnson Road Compressor Station	[TBD]	Fairbanks North Star Borough
George Lake Compressor Station	[TBD]	Tanana-Tetlin Census Area
Tetlin Junction Compressor Station	[TBD]	Tanana-Tetlin Census Area
METER STATIONS		
Prudhoe Bay Meter Station (at GTP)	[TBD]	North Slope Borough
MAINLINE BLOCK VALVES		
MLBV-AK1 (at Prudhoe Bay Meter Station)	[TBD]	North Slope Borough
MLBV-AK2	[TBD]	North Slope Borough
MLBV-AK3	[TBD]	North Slope Borough
MLBV-AK4	[TBD]	North Slope Borough
MLBV-AK5	[TBD]	North Slope Borough
MLBV-AK6 (at Happy Valley Compressor Station)	[TBD]	North Slope Borough
MLBV-AK7	[TBD]	North Slope Borough
MLBV-AK8	[TBD]	North Slope Borough
MLBV-AK9	[TBD]	North Slope Borough
MLBV-AK10 (at Galbraith Lake Compressor Station)	[TBD]	North Slope Borough
MLBV-AK11	[TBD]	North Slope Borough
MLBV-AK12	[TBD]	Yukon-Koyukuk Census Area
MLBV-AK13	[TBD]	Yukon-Koyukuk Census Area
MLBV-AK14	[TBD]	Yukon-Koyukuk Census Area
MLBV-AK15	[TBD]	Yukon-Koyukuk Census Area
MLBV-AK16 (at Chapman Creek Compressor Station)	[TBD]	Yukon-Koyukuk Census Area
MLBV-AK17	[TBD]	Yukon-Koyukuk Census Area
MLBV-AK18	[TBD]	Yukon-Koyukuk Census Area
MLBV-AK19	[TBD]	Yukon-Koyukuk Census Area
MLBV-AK20	[TBD]	Yukon-Koyukuk Census Area
MLBV-AK21 (at Fort Hamlin Hills Compressor Station)	[TBD]	Yukon-Koyukuk Census Area
MLBV-AK22	[TBD]	Yukon-Koyukuk Census Area
MLBV-AK23	[TBD]	Yukon-Koyukuk Census Area
MLBV-AK24	[TBD]	Yukon-Koyukuk Census Area
MLBV-AK25	[TBD]	Yukon-Koyukuk Census Area
MLBV-AK26 (at Tatalina River Compressor Station)	[TBD]	Yukon-Koyukuk Census Area
MLBV-AK27	[TBD]	Fairbanks North Star Borough
MLBV-AK28	[TBD]	Fairbanks North Star Borough
MLBV-AK29	[TBD]	Fairbanks North Star Borough
MLBV-AK30	[TBD]	Fairbanks North Star Borough
MLBV-AK31 (at Johnson Road Compressor Station)	[TBD]	Fairbanks North Star Borough
MLBV-AK32	[TBD]	Fairbanks North Star Borough
MLBV-AK33	[TBD]	Tanana-Tetlin Census Area
MLBV-AK34	[TBD]	Tanana-Tetlin Census Area
MLBV-AK35	[TBD]	Tanana-Tetlin Census Area
MLBV-AK36	[TBD]	Tanana-Tetlin Census Area
MLBV-AK37 (at George Lake Compressor Station)	[TBD]	Tanana-Tetlin Census Area
MLBV-AK38	[TBD]	Tanana-Tetlin Census Area
MLBV-AK39	[TBD]	Tanana-Tetlin Census Area

DRAFT

TABLE 1.3.2-1

Alaska Pipeline Project
Aboveground Facilities Associated with the Pipeline [a]

Pipeline/Facility Type/Facility Name	Milepost [b]	Borough or Census Area
MLBV-AK40	[TBD]	Tanana-Tetlin Census Area
MLBV-AK41	[TBD]	Tanana-Tetlin Census Area
MLBV-AK42	[TBD]	Tanana-Tetlin Census Area
MLBV-AK43 (at Tetlin Junction Compressor Station)	[TBD]	Tanana-Tetlin Census Area
MLBV-AK44	[TBD]	Tanana-Tetlin Census Area
MLBV-AK45	[TBD]	Tanana-Tetlin Census Area
MLBV-AK46	[TBD]	Tanana-Tetlin Census Area
MLBV-AK47	[TBD]	Tanana-Tetlin Census Area
MLBV-AK48	[TBD]	Tanana-Tetlin Census Area
LAUNCHERS AND RECEIVERS		
Launcher (at Prudhoe Bay Meter Station)	[TBD]	North Slope Borough
Launcher and Receiver (at Galbraith Compressor Station)	[TBD]	North Slope Borough
Launcher and Receiver (at Fort Hamlin Hills Compressor Station)	[TBD]	Yukon-Koyukuk Census Area
Launcher and Receiver (at George Lake Compressor Station)	[TBD]	Tanana-Tetlin Census Area
INTERMEDIATE GAS DELIVERY POINTS		
[Note: The following intermediate delivery points were identified by the In-State Needs Study and are currently considered the most likely off-take points based on expected demand. The final determination of the locations for intermediate gas delivery points will depend on input from potential shippers and the State of Alaska. APP will make provision for delivery along the pipeline (at the points finally selected) through the installation of tees, valves, and blind flanges.]		
Livengood	[TBD]	Yukon-Koyukuk Census Area
Parks Highway Spur	[TBD]	Fairbanks North Star Borough
Fairbanks	[TBD]	Fairbanks North Star Borough
Delta Junction and Anchorage	[TBD]	Tanana-Tetlin Census Area
Tok	[TBD]	Tanana-Tetlin Census Area

[a] Cathodic protection facilities will be installed at the MLBV, compressor station, and meter station sites. Test lead posts will be located along the permanent right-of-way.

[b] PMP = Point Thomson Gas Transmission Pipeline milepost, AMP = Alaska Mainline milepost

Compressor Stations

Along the PTGP, no compressor stations are required because receipt gas pressure at the PTU will be sufficient to offset pressure losses caused by friction.

Along the Alaska Mainline, eight compressor stations will be required at intervals where gas pressure will need to be increased to offset pressure losses caused by friction (see Table 1.3.2-1). Section 1.4.2.2 describes the land requirements associated with the compressor station sites.

Each compressor station will include gas compression equipment to increase the pressure of the gas entering the station to a pressure as high as 2,500 psig. Cooling equipment will cool the compressor discharge gas leaving the station to a temperature of about 30°F year-round at stations located north of the Brooks Range due to continuous permafrost conditions in this region. For stations located south of the Brooks Range where permafrost is discontinuous, seasonal variation in station discharge gas temperature will range from about 25°F in the winter to about 45°F in the summer, resulting in an annual average temperature between 30°F to 35°F. The gas compressors will be driven by gas turbines, fueled by natural gas sourced from the pipeline.

DRAFT

In general, all compressor stations will have a similar design. The compressor station site will be fenced and installed on a pad, built up with granular materials. A fire buffer zone, extending about 130 feet beyond the fence, will be created by cutting and removing large brush and trees. At stations underlain by thaw-sensitive permafrost, buildings will be elevated and gravel pads will be thicker to mitigate heat transfer to the underlying permafrost.

Compressor station utilities supporting the operation of the gas compressor and cooling equipment will be housed in modularized, skid-mounted buildings, each building being about 50 feet long by 15 feet wide. These buildings will include:

- Mechanical skid, housing boilers and pumps to provide building heating, air compressors, and dryers;
- Switchgear skid providing main power distribution;
- Control skid containing motor control center, station and unit control panels, uninterruptible power supply, telecommunications, and a supervisory control and data acquisition system;
- Power generator skids;
- Personnel skid, containing lunch room and office;
- Storage building for spare parts and equipment; and
- Living quarters for up to six personnel.

Communication facilities will include a satellite dish.

Gas turbine and compressor packages will be housed in heated compressor buildings that will include gas turbine inlet air filtration and silencing, gas-turbine exhaust gas ducting and silencing, a control system, and auxiliary systems. To protect the compressor, an inlet scrubber will be installed in the station suction piping to remove entrained liquids and foreign material from the gas that enters the compressor station. Power will be produced on site using natural gas fueled generators.

Cooling equipment, comprising gas-to-gas heat exchangers and aerial coolers, will be installed at compressor stations to cool discharge gas. Warm compressor discharge gas will initially be cooled by aerial coolers and then by cold suction gas in the gas-to-gas heat exchangers prior to leaving the station.

As listed in Table 1.3.2-1, compressor station sites will also typically include a MLBV and, at some locations, a launcher and a receiver.

Compressor stations will be designed for remote operation and will be accessible by vehicles using permanent access roads and by helicopter using new helipads. Site maps of the compressor stations are included in Appendix 1B.

Custody Transfer Meter Stations

Along the PTGP, APP will construct and operate one receipt meter station at the PTU to provide custody transfer measurement of gas entering the PTGP (see Table 1.3.2-1). This facility is referred to as the PTU Meter Station. The site will be accessible by helicopter using the landing area within the PTU.

DRAFT

Along the Alaska Mainline, APP will construct and operate one receipt meter station at the GTP to provide custody transfer measurement of gas entering the Alaska Mainline from the GTP. This facility is referred to as the Prudhoe Bay Meter Station. The site will be accessible by vehicles using the proposed GTP access road or a separate dedicated access road. [Note: Access to be further defined in the Draft Report]

Each meter station site will include a gas scrubber/strainer, above-grade piping, an instrument building, a meter-run building, flow-metering and gas-quality monitoring equipment, and a MLBV and pig launcher. Buildings will be elevated to mitigate heat transfer to the underlying permafrost.

Section 1.4.2.2 describes the land requirements associated with the meter station sites. Site maps of the meter stations are included in Appendix 1B.

Mainline Block Valves

MLBVs are used to segment the pipeline for safety, operations, and maintenance purposes. Section 1.4.2.2 describes the land requirements associated with the MLBV sites.

Along the PTGP, APP will construct and operate four MLBVs (see Table 1.3.2-1). Two MLBVs will be located at associated facilities (i.e., the PTU and the GTP) and two MLBVs will be standalone facilities along the PTGP.

Along the Alaska Mainline, APP will construct and operate 48 MLBVs (see Table 1.3.2-1). A MLBV will be located at each of the eight compressor stations, one MLBV will be located at the Prudhoe Bay Meter Station, and 39 MLBVs will be standalone facilities along the Alaska Mainline. Access to stand-alone MLBVs will be by helicopter or by ground transportation.

A MLBV site will typically include a block valve complete with a valve operator and a line break control system to close the valve upon detection of a low-pressure condition, blowdown valves, and a security chain-link fence.

Launchers and Receivers

Launcher and receiver sites allow the pipeline to accommodate a high resolution internal line inspection tool, colloquially known as instrumented pigs. Section 1.4.2.2 describes the land requirements associated with the launcher and receiver sites.

Along the PTGP, APP will construct and operate one launcher and one receiver (see Table 1.3.2-1). The launcher will be located at the PTU Meter Station site and the receiver will be located at the GTP site.

Along the Alaska Mainline, APP will construct and operate four launchers and three receivers (see Table 1.3.2-1). One launcher will be located at the Prudhoe Bay Meter Station (at the GTP) and a set of launchers and receivers will be located at three compressor station sites.

Intermediate Gas Delivery Points

APP will install intermediate gas delivery points along the Alaska Mainline (see Table 1.3.2-1). [Note: See note provided in table 1.3.2-1.] These points will provide the potential to deliver gas in Alaska at a minimum of five locations. At each intermediate gas delivery point, tees, valves, and blind flanges will be installed. Section 1.4.2.2 describes the land requirements associated with the intermediate delivery point sites. The facilities to condition and distribute gas will be constructed and operated by others. At this time, there are no contractual agreements in place with others to receive gas. The initial locations are based upon the In-State Gas Demand Study

DRAFT

included as Appendix B of APP's April 29, 2010 Open Season filing. APP will review the locations with the State of Alaska and potential shippers to further refine the locations.

Cathodic Protection Facilities

Corrosion protection for APP pipeline facilities will be provided by an external corrosion resistant coating and an impressed current cathodic protection system (CPS) augmented by sacrificial anodes. CPS test stations (aboveground posts) will be located at about 2-mile intervals. All CPS facilities (i.e., groundbeds and rectifiers) associated with the PTGP and Alaska Mainline will be located at compressor station and meter station sites, and on the permanent right-of-way at some MLBV sites (see Table 1.3.2-1). Section 1.4.2.2 describes the land requirements associated with the cathodic protection facility sites.

1.3.3 ASSOCIATED INFRASTRUCTURE

1.3.3.1 Gas Treatment Plant

Module Staging Area

APP will construct a laydown or staging area for GTP modules near West Dock. This area will be needed because the existing PBU staging area near West Dock is heavily used and will not be sufficient to meet APP's module staging area needs. The proposed laydown area will be located immediately southeast of the existing PBU staging area. [Note: Figure to be provided in the Draft Report.] Section 1.4.3.1 summarizes the land requirements associated with the module staging area.

Access Roads

An ice road, approximately 1.5 miles in length, will be constructed for initial site development activities between the GTP site and the Putuligayuk-23 (Put-23) mine. [Note: Figure to be provided in the Draft Report.] In addition, an ice road will be constructed for access during construction of the dedicated GTP water reservoir and water transfer line. [Note: Access to be further defined in the Draft Report.]

APP will use existing, to-be-modified, and new roads to access the GTP site from West Dock. Modifications to the existing access roads will be required to accommodate the transport of GTP modules from the dock to the GTP site. The existing haul road between the new module staging area and the GTP will also be widened by at least 25 feet (total width of at least 70 feet) for approximately 4.2 miles to accommodate the width of the GTP modules. The inside road curves will also be widened to accommodate the length of the transport trailers during sweeping turns and the existing road grade will be reduced so that the trailers can safely move the large loads over flat grades. [Note: Figure to be provided in the Draft Report.]

APP will also construct a new, permanent road to access the GTP site from the main haul road. The road will be used to transport the modules and other heavy equipment, and will branch off the main road north of the CGF for approximately 1.7 miles to the GTP. This road will be called the North Access Road. A new light duty road will also be constructed to permanently access the GTP from the main road from the south of the CGF. This road will be called the South Access Road and will be approximately 1.6 miles long. [Note: Figure to be provided in the Draft Report.]

All new and modified facilities and roads will become permanent features following construction. Section 1.4.3.1 summarizes the land requirements associated with the GTP access roads.

DRAFT

Construction Camp

Due to the project's remote location, APP will use a temporary camp at the GTP site during construction. The GTP camp will be constructed to house up to 850 workers during construction of the GTP. The majority of this camp will be removed sometime after plant startup. Operations housing will be built as part of the permanent plant facilities consisting of:

- Living quarters with approximately 230 rooms and an adequate number of bathrooms; and,
- Catering and housekeeping facilities, including a full-service dining facility, kitchen, cold and dry food storage areas, and laundry facility.

Section 1.4.3.1 summarizes the land requirements associated with the GTP construction camp.

Borrow Sites

The material, sand, and gravel required for construction of the GTP and related facilities (e.g., West Dock modifications discussed below) will be obtained from existing borrow sites. Gravel will be sourced from Put-23 mine, an existing borrow site located approximately 1.5 miles south of the GTP site, and/or other existing borrow sites.

Section 1.4.3.1 summarizes the land requirements associated with the borrow site for the GTP.

West Dock Modifications

Dock Heads

Most of the modules and materials needed for GTP will be transported to the ANS by cargo transports using ocean tugs and barges. Upon arriving in Prudhoe Bay, APP will use existing Dock Head 2 (DH-2) and Dock Head 3 (DH-3) at the West Dock Causeway to off-load the modules and materials to land. APP will modify DH-2 for the GTP module sealift off-loads, while no modifications beyond normal maintenance activities are planned for DH-3. Both of these docks have been used previously to support existing oil producing facilities.

Modifications at DH-2 will allow for the simultaneous mooring of multiple barges. In addition, the causeway road from DH-2 to the existing staging area will also need to be widened to address operational and safety issues. [Note: Figure to be provided in the Draft Report.]

Dock Dredging and Disposal

Initial dredging will be required prior to the first sealift (Sealift No. 1). [Note: Figure to be provided in the Draft Report.] In subsequent construction years, maintenance dredging will be performed as required to maintain the channel to specification width and depth. [Note: APP is working to identify dredge disposal sites, including beneficial use options. Additional information discussing dredge disposal will be provided in the Draft Report.]

Section 1.4.3.1 summarizes the land requirements associated with the West Dock modifications.

1.3.3.2 Pipeline Facilities

Additional Temporary Workspaces

In addition to the temporary workspace needed for construction of the pipelines, APP will use ATWS for staging areas; truck turnarounds; utility crossovers; road, railroad, waterbody, and wetland crossings; areas of rocky soils, steep slopes, and rugged terrain; and at other site-specific locations on a temporary basis during construction. Appendix 1D lists the approximate

DRAFT

milepost locations of ATWS associated with APP. Section 1.4.3.2 summarizes the land requirements associated with ATWS. [Note: ATWS requirements are being evaluated and will be further defined in the Draft Report.]

Access Roads

APP will use access roads during construction to transport equipment, material, pipe, and personnel to the right-of-way, compressor stations, borrow sites, and other locations. No road improvements are expected to be required for major public roads that will be used during construction of the Project. APP may need to modify some existing non-public roads (e.g., in PBU) to accommodate large and heavy construction equipment and material. Modifications may include adding gravel to increase the road's load-bearing capacity, grading rough areas, filling in low spots and potholes, widening roadbeds and curves, and installing culverts.

If existing roads are not readily available, or do not provide adequate access, APP will build new temporary or permanent access roads using available in-situ material (such as native soils or timber), imported granular material, or snow/ice. Construction of new permanent roads to access the Prudhoe Bay Meter Station at the GTP, compressor stations, and some MLBVs may be needed. Permanent bridges will be constructed, if needed, to cross waterbodies on such roads. The material for building an access road will depend on a number of factors. These factors are:

- Seasonality of required access;
- Durability or trafficability;
- Terrain contours; and
- Readily available native material.

The type of access road depends on its intended use. Table 1.3.3-1 below provides a summary of the different types of access roads for differing uses.

DRAFT

TABLE 1.3.3-1

Alaska Pipeline Project
Access Road Characteristics by Type and Typical Use

Access Road Material	Access Road Characteristics	General use or area road to be constructed
Granular Material	- Typical of existing access roads used in Alaska for all season access or permanent access - Requires granular material to be mined from a borrow site, including constructing an access road to the borrow site - Provides a solid trafficable surface easily maintained to provide high durability to accommodate heavy loads all year	- Alaska Mainline Milepost (AMP) [TBD] - Existing roads to be modified or extended - All season access required - Heavy traffic loads or high number of traffic cycles - Permanent facilities
Snow and Ice	- Typical of winter Alaska tundra travel to support oil and gas drilling logistics - Requires placement of both water and ice aggregate once withdrawn from a waterbody - Reduced durability compared to granular and soil type access roads - Requires large amounts of effort and water to maintain a trafficable surface once construction tracked equipment has traveled on it - Minimal to no long term evidence once melted	- Predominantly used north of AMP 60 and along entire PTGP route. - Typically only suited to flat or near flat terrain
Soil	- Suited to temporary use only. Typical pipeline construction in areas of competent bearing soils (e.g., clay or glacial till) - Easily maintained for both winter and summer construction seasons - Typically not trafficable during adverse wet conditions or spring break-up	- AMP [TBD] - Only applicable if parent soil is able to bear trafficable loads - May be supplemented with a granular surface to maintain trainability

Table 1.3.3-2 lists the to-be-modified and new access roads required for the project, including information such as location, type, length, and improvements needed. Section 1.4.3.2 summarizes the land requirements for access roads associated with APP. [Note: Access road data is being collected and information will be provided in the Draft Report.]

TABLE 1.3.3-2

Alaska Pipeline Project
Modified and New Access Roads Associated with the Pipeline
[Note: Table data is pending and will be further defined in the Draft Report.]

Segment/ Road Name	Type	Approximate Milepost [a]	Road Length x Width (feet)	Surface Composition	Project That Previously Used the Road	Improvements or New
POINT THOMSON GAS TRANSMISSION PIPELINE						
ALASKA MAINLINE						

[a] PMP = Point Thomson Gas Transmission Pipeline milepost, AMP = Alaska Mainline milepost

For proposed access roads where there is no evidence of previous grading or surfacing, or where the road will require widening, road improvements will be allowed only after completing

DRAFT

cultural and biological surveys, and completing the appropriate permitting consultations. In all cases, roads will be used and improved only with permission of the landowner or land management agency. Following construction, temporary access roads will be left in place or reclaimed.

Helipads

APP will install a helipad at all proposed compressor station sites, at some construction camps, and at MLBV sites where existing roads do not provide adequate access and where a stable landing surface is not available along the permanent right-of-way. Helipads will be located within the footprint of the proposed facility, camp, or permanent right-of-way.Table 1.3.3-3 lists the proposed helipad locations. Section 1.4.3.2 summarizes the land requirements for helipads associated with APP.

TABLE 1.3.3-3

Alaska Pipeline Project
Helipads Associated with the Pipeline

Pipeline/Borough or Census Area/Helipad Location	Approx. Milepost [a]	Permanent or Temporary
POINT THOMSON GAS TRANSMISSION PIPELINE		
NORTH SLOPE BOROUGH		
Point Thomson East Camp	[TBD]	Temporary
ALASKA MAINLINE		
NORTH SLOPE BOROUGH		
Deadhorse Camp	[TBD]	Temporary
Franklin Bluff Camp	[TBD]	Temporary
Happy Valley Compressor Station	[TBD]	Permanent
Happy Valley Camp	[TBD]	Temporary
Galbraith Camp	[TBD]	Temporary
Galbraith Compressor Station	[TBD]	Permanent
Atigun Pass Camp	[TBD]	Temporary
Chandalar Camp	[TBD]	Temporary
YUKON-KOYUKUK CENSUS AREA		
Dietrich Camp	[TBD]	Temporary
Coldfoot Camp	[TBD]	Temporary
Chapman Creek Compressor Station	[TBD]	Permanent
Kanuti River (Old Man) Camp	[TBD]	Temporary
Fort Hamlin Hills Compressor Station	[TBD]	Permanent
Five Miles Camp	[TBD]	Temporary
Livengood Camp	[TBD]	Temporary
Tatalina River Compressor Station	[TBD]	Permanent
FAIRBANKS NORTH STAR BOROUGH		
Little Chena Camp	[TBD]	Temporary
Johnson Road Compressor Station	[TBD]	Permanent
Johnson Road Camp	[TBD]	Temporary
TANANA-TETLIN CENSUS AREA		
Rosa Creek Camp	[TBD]	Temporary
Delta Junction Camp	[TBD]	Temporary
George Lake Compressor Station	[TBD]	Permanent
George Lake Camp	[TBD]	Temporary

DRAFT

TABLE 1.3.3-3

Alaska Pipeline Project
Helipads Associated with the Pipeline

Pipeline/Borough or Census Area/Helipad Location	Approx. Milepost [a]	Permanent or Temporary
Tok Camp	[TBD]	Temporary
Tetlin Junction Compressor Station	[TBD]	Permanent
Beaver Creek Camp	[TBD]	Temporary

[a] PMP = Point Thomson Gas Transmission Pipeline milepost, AMP = Alaska Mainline milepost
[b] [Note: Landownership and previous use associated with helipads are being evaluated and additional information will be provided in the Draft Report.]

Airstrips

APP will use existing airports and airfields, collectively termed airstrips, to transport personnel and freight to and from the project area. Table 1.3.3-4 lists the name and locations of potential airstrips that will be used during construction. APP does not anticipate the need to upgrade any existing commercial airports for the project, but may need to make minor upgrades to some existing (non-commercial) airfields. Section 1.4.3.2 summarizes the land requirements for airstrips associated with the APP. [Note: APP is evaluating airstrip requirements and will provide additional information in the Draft Report.]

TABLE 1.3.3-4

Alaska Pipeline Project
Airstrips Associated with the Pipeline

Pipeline/Borough or Census Area/Airstrip Name	Approximate Corresponding Milepost [a]	Distance (miles) and Direction from Pipeline[b]
POINT THOMSON GAS TRANSMISSION PIPELINE		
[TBD]	[TBD]	[TBD]
ALASKA MAINLINE		
NORTH SLOPE BOROUGH		
Deadhorse Airfield [c]	[TBD]	[TBD]
Franklin Bluffs Airstrip	[TBD]	[TBD]
Happy Valley Airstrip	[TBD]	[TBD]
Galbraith Lake Airport [c]	[TBD]	[TBD]
YUKON-KOYUKUK CENSUS AREA		
Chandalar Airfield [c]	[TBD]	[TBD]
Dietrich Airport	[TBD]	[TBD]
Coldfoot Airfield [c]	[TBD]	[TBD]
Old Man Camp Airfield [c]	[TBD]	[TBD]
Five Mile Airport	[TBD]	[TBD]
Livengood Airfield [c]	[TBD]	[TBD]
FAIRBANKS NORTH STAR BOROUGH		
Fairbanks International Airport [c]	[TBD]	[TBD]
SOUTHEAST FAIRBANKS CENSUS AREA		
Delta Junction Airfield	[TBD]	[TBD]
Tanacross Airfield [c]	[TBD]	[TBD]

DRAFT

TABLE 1.3.3-4

Alaska Pipeline Project
Airstrips Associated with the Pipeline

Pipeline/Borough or Census Area/Airstrip Name	Approximate Corresponding Milepost [a]	Distance (miles) and Direction from Pipeline[b]
Tok Airport [c]	[TBD]	[TBD]
Tetlin Airfield [c]	[TBD]	[TBD]
Northway Airport [c]	[TBD]	[TBD]
ANCHORAGE MUNICIPALITY		
Anchorage International Airport [c]	[TBD]	[TBD]
VALDEZ-CORDOVA CENSUS AREA		
Whittier Airport [c]	[TBD]	[TBD]
Valdez Airport [c]	[TBD]	[TBD]
KENAI PENINSULA BOROUGH		
Seward Airport	[TBD]	[TBD]
SKAGWAY-HOONAH-ANGOON CENSUS AREA		
Skagway Airport [c]	[TBD]	[TBD]
HAINES BOROUGH		
Haines Airport [c]	[TBD]	[TBD]
JUNEAU CITY AND BOROUGH		
Juneau International Airport [c]	[TBD]	[TBD]

[a] PMP = Point Thomson Gas Transmission Pipeline milepost, AMP = Alaska Mainline milepost
[b] N = North, E = East, S = South, W = West
[c] Airport under controlling authority of Alaska Department of Transportation (commercial airport).

Construction Camps, Pipe Storage Areas, and Contractor Yards

Due to the project's remote location, APP will use temporary camps, pipe storage areas, and contractor yards at various locations during construction. These areas will, to the extent possible, be located at previously disturbed sites. Table 1.3.3-5 lists the construction camp, pipe storage area, and contractor yard sites currently under evaluation by APP, including the approximate milepost, distance and direction from the pipeline, and whether or not the site has been previously used. Route maps included in Appendix 1A show the proposed locations of these areas, or the distance and direction of these areas from the proposed pipeline (if the site is not located within the map view). Section 1.4.3.2 summarizes the land requirements for construction camps, pipe storage areas, and contractor yards associated with the construction of the APP. [Note: APP is still evaluating construction camp, pipe storage area, and contractor yard needs, and will further define these areas in the Draft Report. Maps of all facilities will be included in the Draft Report.]

DRAFT

TABLE 1.3.3-5

Alaska Pipeline Project
Locations Associated with the Pipeline: Construction Camps, Pipe Storage Areas, and Contractor Yards

Pipeline/Borough or Census Area/Facility Name	Approximate Milepost[a]	Distance (miles) and Direction from Pipeline[b]	Camp	Pipe Storage Area	Contractor Yard	Previous Use?
POINT THOMSON GAS TRANSMISSION PIPELINE						
NORTH SLOPE BOROUGH						
Point Thomson East Camp	[TBD]	[TBD]	✓	✓	✓	[TBD]
Point Thomson Central 1	[TBD]	[TBD]		✓	✓	[TBD]
Point Thomson Central 2	[TBD]	[TBD]		✓	✓	[TBD]
Point Thomson West Camp	[TBD]	[TBD]	✓	✓	✓	[TBD]
ALASKA MAINLINE						
NORTH SLOPE BOROUGH						
Deadhorse Camp	[TBD]	[TBD]	✓	✓	✓	[TBD]
Franklin Bluff Camp	[TBD]	[TBD]	✓	✓	✓	[TBD]
Happy Valley Compressor Station	[TBD]	[TBD]	✓		✓	[TBD]
Happy Valley Camp	[TBD]	[TBD]	✓	✓	✓	[TBD]
Happy Valley	[TBD]	[TBD]		✓		[TBD]
Galbraith Lake	[TBD]	[TBD]		✓		[TBD]
Galbraith Lake Camp	[TBD]	[TBD]	✓	✓	✓	[TBD]
Galbraith Lake Compressor Station	[TBD]	[TBD]	✓		✓	[TBD]
Atigun River Camp	[TBD]	[TBD]	✓		✓	[TBD]
Atigun River	[TBD]	[TBD]		✓		[TBD]
Chandalar Camp	[TBD]	[TBD]	✓	✓	✓	[TBD]
Chandalar Shelf	[TBD]	[TBD]		✓		[TBD]
YUKON-KOYUKUK CENSUS AREA						
Dietrich Camp	[TBD]	[TBD]	✓	✓	✓	[TBD]
Dietrich	[TBD]	[TBD]		✓		[TBD]
Coldfoot Camp	[TBD]	[TBD]	✓	✓	✓	[TBD]
Chapman Creek Compressor Station	[TBD]	[TBD]	✓		✓	[TBD]
Prospect Creek	[TBD]	[TBD]		✓	✓	[TBD]
Kanuti River (Old Man) Camp	[TBD]	[TBD]	✓	✓	✓	[TBD]
Dall River	[TBD]	[TBD]		✓		[TBD]
Fort Hamlin Hills Compressor Station	[TBD]	[TBD]	✓		✓	[TBD]
Five Miles Camp	[TBD]	[TBD]	✓	✓	✓	[TBD]
Five Miles	[TBD]	[TBD]		✓		[TBD]
Hess Creek	[TBD]	[TBD]	✓	✓	✓	[TBD]
Livengood Camp	[TBD]	[TBD]	✓	✓	✓	[TBD]
Tatalina River Compressor Station	[TBD]	[TBD]	✓		✓	[TBD]
Tatalina River	[TBD]	[TBD]		✓		[TBD]
FAIRBANKS NORTH STAR BOROUGH						
Treasure Creek	[TBD]	[TBD]		✓		[TBD]
Fort Wainwright	[TBD]	[TBD]		✓	✓	[TBD]
Little Chena Camp	[TBD]	[TBD]	✓	✓	✓	[TBD]
Johnson Road Compressor Station	[TBD]	[TBD]	✓		✓	[TBD]
Johnson Road Camp	[TBD]	[TBD]	✓	✓	✓	[TBD]
Salcha River	[TBD]	[TBD]		✓		[TBD]
TANANA-TETLIN CENSUS AREA						

DRAFT

TABLE 1.3.3-5

Alaska Pipeline Project
Locations Associated with the Pipeline: Construction Camps, Pipe Storage Areas, and Contractor Yards

Pipeline/Borough or Census Area/Facility Name	Approximate Milepost[a]	Distance (miles) and Direction from Pipeline[b]	Camp	Pipe Storage Area	Contractor Yard	Previous Use?
Rosa Creek Camp	[TBD]	[TBD]	✓	✓	✓	[TBD]
Quartz Lake	[TBD]	[TBD]		✓		[TBD]
Delta Junction Camp	[TBD]	[TBD]	✓	✓	✓	[TBD]
Arrow Creek	[TBD]	[TBD]		✓		[TBD]
George Lake Compressor Station	[TBD]	[TBD]	✓		✓	[TBD]
George Lake Camp	[TBD]	[TBD]	✓	✓	✓	[TBD]
Sears Creek	[TBD]	[TBD]		✓		[TBD]
Cathedral Bluffs	[TBD]	[TBD]		✓		[TBD]
Tok Camp	[TBD]	[TBD]	✓	✓	✓	[TBD]
Tok River	[TBD]	[TBD]		✓		[TBD]
Tetlin Junction Compressor Station	[TBD]	[TBD]	✓		✓	[TBD]
Beaver Creek Camp	[TBD]	[TBD]	✓	✓	✓	[TBD]
Northway Junction	[TBD]	[TBD]		✓		[TBD]
Seaton	[TBD]	[TBD]		✓		[TBD]

[a] PMP = Point Thomson Gas Transmission Pipeline milepost, AMP = Alaska Mainline milepost
[b] N = North, E = East, S = South, W = West

Temporary construction camps will be required to house workers during construction. Some camps will be relocated as the construction work progresses. The temporary construction camps will be self-contained, and operated and maintained throughout the pipeline and facilities construction period. In addition to housing facilities, the camps will typically be equipped with appropriate emergency medical facilities, electrical power generation, fuel storage, and facilities for sewage gathering or treatment, and waste incineration and management facilities.

The camps will house work crews, supervisors, inspectors, field management, and support staff. APP anticipates that the following types of camps will be used:

- Pioneer camps (50 to 125 personnel) will be used to support development of project infrastructure, clearing, and isolated construction operations (for example, major river crossings and borrow site locations). These generally will be located at sites planned for other uses such as pipeline and facility camps, pipe storage yards, contractor yards, and the pipeline construction right-of-way.
- Facility camps (75 to 150 personnel) will be used to support meter station and compressor station construction. These generally will be located at facility construction sites.
- Pipeline camps (750 to 1,600 personnel) will be used to support pipeline construction. These larger camps will be generally collocated with contractor yards and some of the pipe storage yards.

Potable water for the camps will be trucked in or sourced from on-site wells. Water requirements and sources for the project will be detailed in Section 2.X of Resource Report 2.

DRAFT

Pipe storage areas will temporarily house the pipe to be installed. Pipe storage yards will be either standalone or co-located with camps and contractor yards.

Contractor yards will be used for construction staging, storing materials, equipment rig-up, setting up temporary construction trailers, fabrication work, safety and environmental training, equipment repair, and contract administration.

After construction, all temporary camps, pipe storage areas, and contractor yards will be disassembled and removed unless other arrangements are made with the landowner or land managing agency. The gravel pad installed as part of camp or yard construction will be left in place in accordance with land use agreements.

Compressor station sites will include permanent housing facilities for intermittent occupation; no other permanent housing facilities will be required for operation of the pipeline.

Borrow Sites

The APP will require the use of borrow material for several project activities. This will include material for compressor station sites, campsites, pipe storage areas, contractor yards, access roads, in trench import fill, right-of-way preparation, some MLBVs, some airstrips, and some helicopter pads. The borrow material required for these facilities will be obtained from numerous borrow sites that are either available to or will be developed by APP. [Note: Borrow sites are still being evaluated and are expected to be further defined in the Draft Report.]

Borrow sites may also be used during construction for concrete production, temporary laydown, equipment staging, etc. Appendix 1F lists the locations of the proposed borrow sites associated with APP. Section 1.4.3.2 summarizes the land requirements for borrow sites.

After construction, APP-controlled borrow sites will either be used for other projects such as for road construction administered by the Alaska Department of Transportation and Public Facilities (ADOTPF), or abandoned in accordance with land use agreements.

1.4 LAND REQUIREMENTS

Table 1.4-1 summarizes the land requirements for APP including the pipeline construction and operation rights-of-way, aboveground facility sites including the GTP, ATWS, access roads, helipads, airstrips, construction camps, pipe storage and contractor yards, borrow sites, and dock modifications. A detailed description and breakdown of land requirements required for the project and their uses will be presented in Resource Report 8.

TABLE 1.4-1

Alaska Pipeline Project
Summary of Land Requirements and Impacts

Facility	Approximate Milepost(s) [a]	Land Affected During Construction (acres)	Land Affected During Operation (acres)
PIPELINE RIGHT-OF-WAY			
Point Thomson Gas Transmission Pipeline (PTGP) [b]	[TBD]	1,413.7	706.9
Subtotal	[TBD]	1,413.7	706.9
Alaska Mainline [b]			
North Slope Borough	[TBD]	4,501.8	2,250.9
Yukon–Koyukuk census area	[TBD]	5,927.3	2,963.7
Fairbanks North Star Borough	[TBD]	2,138.2	1,069.1

DRAFT

TABLE 1.4-1

Alaska Pipeline Project
Summary of Land Requirements and Impacts

Facility	Approximate Milepost(s) [a]	Land Affected During Construction (acres)	Land Affected During Operation (acres)
Tanana–Tetlin census area	[TBD]	5,481.2	2,740.6
Subtotal	[TBD]	18,048.5	9,024.3
Pipeline Right-of-Way Subtotal	[TBD]	19,462.2	9,731.1
ABOVEGROUND FACILITIES			
Gas Treatment Plant (GTP) [c]	[TBD]	155	155
Pipeline Aboveground Facilities			
Compressor Stations	[TBD]	200	200
Meter Stations	[TBD]	0.0 [d]	0.0 [d]
Mainline Block Valves	[TBD]	0.0 [d]	0.0 [d]
Pig Launchers/Receivers	[TBD]	0.0 [d]	0.0 [d]
Intermediate Gas Delivery Points	[TBD]	0.0 [d]	0.0 [d]
Aboveground Facilities Subtotal		200	200
ASSOCIATED INFRASTRUCTURE			
GTP			
Module Staging Area	[TBD]	25	25
Access Roads [e]	[TBD]	44	44
Construction Camp	[TBD]	0.0 [d]	0.0 [d]
Borrow Site	[TBD]	0.0 [d]	0.0 [d]
West Dock Modifications [f]	[TBD]	10	10
GTP Associated Infrastructure Subtotal			
Pipeline Facilities			
Additional Temporary Workspace	Various		
PTGP		[TBD][b]	[TBD][b]
Alaska Mainline		[TBD][b]	[TBD][b]
Access Roads	[TBD]	[TBD][b]	[TBD][b]
Helipads	[TBD]	0.0 [d]	0.0 [d]
Airstrips	[TBD]	[TBD][b]	[TBD][b]
Construction Camps, Pipe Storage Areas, and Contractor Yards	[TBD]	[TBD][b]	[TBD][b]
Borrow Sites	Various (see Appendix 1F)	[TBD][b]	[TBD][b]
Pipeline Associated Infrastructure Subtotal		[TBD][b]	[TBD][b]
PROJECT TOTAL		19,897[b]	10,166[b]

DRAFT

TABLE 1.4-1

Alaska Pipeline Project
Summary of Land Requirements and Impacts

Facility	Approximate Milepost(s) [a]	Land Affected During Construction (acres)	Land Affected During Operation (acres)

[a] PMP = Point Thomson Gas Transmission Pipeline milepost, AMP = Alaska Mainline milepost

[b] Construction acreage is based on a 200-foot-wide pipeline construction right-of-way. Operation acreage is based on a 100-foot-wide permanent pipeline right-of-way. [Note: Pipeline facility impact acreages were calculated using blanket 200-foot-wide and 100-foot-wide construction and operation dimensions, respectively. This was done as a means to conservatively approximate overall project impacts prior to knowing specific right-of-way widths and associated infrastructure acreages (e.g., ATWS, access roads, yards, borrow sites). All acreages will be more accurately calculated in the Draft Report.]

[c] GTP site only. Includes construction camp. [Note: The acreage associated with the water reservoir is being evaluated and additional information will be included in the Draft Report.].

[d] Acreage used for the construction and operation of a facility is 0.0 when it occurs within the construction or operation footprint of another facility or the construction or permanent right-of-way for the pipeline. Additional acreage is noted if the facility is placed outside of these areas.

[e] Includes new roads (North Road and South Road) and existing haul road widening. [Note: The acreage associated with ice roads is being evaluated and additional information will be included in the Draft Report.].

[f] Dock modifications include bulkhead and pier modifications. [Note: The acreage does not include acreage required for causeway road widening, dredging, or dredge disposal. Additional information will be included in the Draft Report.]

1.4.1 PIPELINE FACILITIES

Workspace associated with the construction and installation of pipelines requires careful planning to provide sufficient space and proper configuration to allow a safe work environment while satisfying regulatory obligations. APP proposes to use a 145- to 175-foot-wide construction right-of-way for the majority of the pipeline route, with 100 feet retained as permanent right-of-way during operation of the new facilities. Wider or narrower rights-of-way may be needed in certain circumstances as described in these resource reports.

During construction, APP will adopt one of the nominal right-of-way configurations listed in Table 1.4.1-1. The rationale for proposed right-of-way widths is provided in Appendix 1G and includes a detailed discussion of the construction right-of-way workspace breakdown (e.g., spoil storage, trench line area, and work area to accommodate equipment movement). In general, the construction right-of-way width will vary depending on the conditions along the pipeline route and construction season. Other factors influencing the construction workspace requirements include proximity to permanent access roads, cross and longitudinal slopes, bedrock, soils, ice, wetlands, and construction traffic volume on the right-of-way. Typical drawings in Appendix 1E illustrate APP's typical right-of-way cross sections along the proposed route.

DRAFT

TABLE 1.4.1-1

Alaska Pipeline Project
Typical Construction Right-of-Way Configurations

Construction Area	Construction Season	Construction Right-of-Way Width (feet)	Right-of-Way Preparation
North Slope	Winter	145	Ice pad
South of North Slope	Winter	145	Conventional
South of North Slope	Summer	175	Conventional with organic stripping if required on agricultural lands
North Slope	Winter	Varies	Ice pad or built-up work pad
South of North Slope	Winter	Varies	Cut and fill
Point Thomson	Winter	145	Ice pad

[a] PMP = Point Thomson Gas Transmission Pipeline milepost, AMP = Alaska Mainline milepost

Appendix 1H summarizes the construction rights-of-way widths by milepost. [Note: Right-of-way widths by milepost are currently being evaluated and additional information will be included in the Draft Report.]

For the portion of the PTGP and Alaska Mainline paralleling existing utility rights-of-way, see Tables 1.3.1-2 and 1.3.1-3.

1.4.2 ABOVEGROUND FACILITIES

1.4.2.1 Gas Treatment Plant

Construction of the GTP will require land for the GTP site, new module staging area, existing and new roads, and water reservoir (for various uses including firewater and process water). Also, the GTP site will include a temporary construction camp. Estimated land and gravel fill requirements for construction and operation of the GTP are summarized in Table 1.4.2-1.

TABLE 1.4.2-1

Alaska Pipeline Project
Gas Treatment Plant Infrastructure Requirements

Item	Length (miles)	Estimated Gravel Fill (cubic yards)	Land Impact (acres)	
			Construction	Operation
Gas Treatment Plant (GTP) Site [a]	[TBD]	[TBD]	155	155
Module Staging Area	[TBD]	[TBD]	25	25
Existing Road Widening	[TBD]	[TBD]	12	12
New Road (North Road)	[TBD]	[TBD]	21	21
New Road (South Road)	[TBD]	[TBD]	11	11
Ice Road (Water transfer line) [b]	[TBD]	[TBD]	[TBD]	[TBD]
Ice Road (Put 23 mine) [c]	[TBD]	[TBD]	[TBD]	[TBD]
Water Reservoir [d]	[TBD]	[TBD]	[TBD]	[TBD]
TOTAL			[TBD]	[TBD]

DRAFT

TABLE 1.4.2-1

Alaska Pipeline Project
Gas Treatment Plant Infrastructure Requirements

Item	Length (miles)	Estimated Gravel Fill (cubic yards)	Land Impact (acres)	
			Construction	Operation

[a] GTP site. Includes construction camp.
[b] Road to access water reservoir. [Note: The road type is under evaluation and additional information will be included in the Draft Report.]
[c] Road to access Put 23 mine for borrow material. [Note: The road dimensions are currently not defined and additional information will be included in the Draft Report.]
[d] [Note: The water reservoir acreage is currently not defined and additional information will be included in the Draft Report.]

Section 1.6.4.1 summarizes construction of the GTP site.

1.4.2.2 Pipeline Aboveground Facilities

Table 1.4.2-2 lists the land use associated with construction and operation of aboveground facilities associated with APP.

TABLE 1.4.2-2

Alaska Pipeline Project
Summary of Construction and Operation Impacts of Aboveground Facilities Associated with the Pipeline[a]

Segment/Facility Name	Milepost [b]	Land Affected During Construction (acres)	Land Affected During Operation (acres)
POINT THOMSON GAS TRANSMISSION PIPELINE			
Point Thomson Unit (PTU) Meter Station	[TBD]	0.0 [c]	0.0 [c]
Mainline Block Valves (MLBVs)			
MLBV-PT1 (PTU Meter Station and Launcher)	[TBD]	0.0 [c]	0.0 [c]
MLBV-PT2	[TBD]	0.0 [c]	0.0 [c]
MLBV-PT3	[TBD]	0.0 [c]	0.0 [c]
MLBV-PT4 (at Gas Treatment Plant (GTP) Receiver)	[TBD]	0.0 [c]	0.0 [c]
Launchers and Receivers			
Launcher (at PTU Meter Station)	[TBD]	0.0 [c]	0.0 [c]
Receiver (at GTP)	[TBD]	0.0 [c]	0.0 [c]
ALASKA MAINLINE			
Compressor Stations			
Happy Valley Compressor Station	[TBD]	25	25
Galbraith Lake Compressor Station	[TBD]	25	25
Chapman Creek Compressor Station	[TBD]	25	25
Fort Hamlin Hills Compressor Station	[TBD]	25	25
Tatalina River Compressor Station	[TBD]	25	25
Johnson Road Compressor Station	[TBD]	25	25
George Lake Compressor Station	[TBD]	25	25
Tetlin Junction Compressor Station	[TBD]	25	25
Meter Stations			
Prudhoe Bay Meter Station (at the GTP)	[TBD]	0.0 [c]	0.0 [c]
Mainline Block Valves			
MLBV-AK1 (at Prudhoe Bay Meter Station)	[TBD]	0.0 [c]	0.0 [c]

DRAFT

TABLE 1.4.2-2

Alaska Pipeline Project
Summary of Construction and Operation Impacts of Aboveground Facilities Associated with the Pipeline[a]

Segment/Facility Name	Milepost [b]	Land Affected During Construction (acres)	Land Affected During Operation (acres)
MLBV-AK2	[TBD]	0.0 [c]	0.0 [c]
MLBV-AK3	[TBD]	0.0 [c]	0.0 [c]
MLBV-AK4	[TBD]	0.0 [c]	0.0 [c]
MLBV-AK5	[TBD]	0.0 [c]	0.0 [c]
MLBV-AK6 (at Happy Valley Compressor Station)	[TBD]	0.0 [c]	0.0 [c]
MLBV-AK7	[TBD]	0.0 [c]	0.0 [c]
MLBV-AK8	[TBD]	0.0 [c]	0.0 [c]
MLBV-AK9	[TBD]	0.0 [c]	0.0 [c]
MLBV-AK10 (at Galbraith Lake Compressor Station)	[TBD]	0.0 [c]	0.0 [c]
MLBV-AK11	[TBD]	0.0 [c]	0.0 [c]
MLBV-AK12	[TBD]	0.0 [c]	0.0 [c]
MLBV-AK13	[TBD]	0.0 [c]	0.0 [c]
MLBV-AK14	[TBD]	0.0 [c]	0.0 [c]
MLBV-AK15	[TBD]	0.0 [c]	0.0 [c]
MLBV-AK16 (at Chapman Creek Compressor Station)	[TBD]	0.0 [c]	0.0 [c]
MLBV-AK17	[TBD]	0.0 [c]	0.0 [c]
MLBV-AK18	[TBD]	0.0 [c]	0.0 [c]
MLBV-AK19	[TBD]	0.0 [c]	0.0 [c]
MLBV-AK20	[TBD]	0.0 [c]	0.0 [c]
MLBV-AK21 (at Fort Hamlin Hills Compressor Station)	[TBD]	0.0 [c]	0.0 [c]
MLBV-AK22	[TBD]	0.0 [c]	0.0 [c]
MLBV-AK23	[TBD]	0.0 [c]	0.0 [c]
MLBV-AK24	[TBD]	0.0 [c]	0.0 [c]
MLBV-AK25	[TBD]	0.0 [c]	0.0 [c]
MLBV-AK26 (at Tatalina River Compressor Station)	[TBD]	0.0 [c]	0.0 [c]
MLBV-AK27	[TBD]	0.0 [c]	0.0 [c]
MLBV-AK28	[TBD]	0.0 [c]	0.0 [c]
MLBV-AK29	[TBD]	0.0 [c]	0.0 [c]
MLBV-AK30	[TBD]	0.0 [c]	0.0 [c]
MLBV-AK31 (at Johnson Road Compressor Station)	[TBD]	0.0 [c]	0.0 [c]
MLBV-AK32	[TBD]	0.0 [c]	0.0 [c]
MLBV-AK33	[TBD]	0.0 [c]	0.0 [c]
MLBV-AK34	[TBD]	0.0 [c]	0.0 [c]
MLBV-AK35	[TBD]	0.0 [c]	0.0 [c]
MLBV-AK36	[TBD]	0.0 [c]	0.0 [c]
MLBV-AK37 (at George Lake Compressor Station)	[TBD]	0.0 [c]	0.0 [c]
MLBV-AK38	[TBD]	0.0 [c]	0.0 [c]
MLBV-AK39	[TBD]	0.0 [c]	0.0 [c]
MLBV-AK40	[TBD]	0.0 [c]	0.0 [c]
MLBV-AK41	[TBD]	0.0 [c]	0.0 [c]
MLBV-AK42	[TBD]	0.0 [c]	0.0 [c]
MLBV-AK43 (at Tetlin Junction Compressor Station)	[TBD]	0.0 [c]	0.0 [c]
MLBV-AK44	[TBD]	0.0 [c]	0.0 [c]
MLBV-AK45	[TBD]	0.0 [c]	0.0 [c]
MLBV-AK46	[TBD]	0.0 [c]	0.0 [c]

DRAFT

TABLE 1.4.2-2

Alaska Pipeline Project
Summary of Construction and Operation Impacts of Aboveground Facilities Associated with the Pipeline[a]

Segment/Facility Name	Milepost [b]	Land Affected During Construction (acres)	Land Affected During Operation (acres)
MLBV-AK47	[TBD]	0.0 [c]	0.0 [c]
MLBV-AK48	[TBD]	0.0 [c]	0.0 [c]
Launchers and Receivers			
Launcher (at Prudhoe Bay Meter Station)	[TBD]	0.0 [c]	0.0 [c]
Launcher and Receiver (at Galbraith Compressor Station)	[TBD]	0.0 [c]	0.0 [c]
Launcher and Receiver (at Fort Hamlin Hills Compressor Station)	[TBD]	0.0 [c]	0.0 [c]
Launcher and Receiver (at George Lake Compressor Station)	[TBD]	0.0 [c]	0.0 [c]
Intermediate Gas Delivery Points [Note: See note provided in table 1.3.2-1]			
Livengood	[TBD]	0.0 [c]	0.0 [c]
Parks Highway Spur	[TBD]	0.0 [c]	0.0 [c]
Fairbanks	[TBD]	0.0 [c]	0.0 [c]
Delta Junction and Anchorage	[TBD]	0.0 [c]	0.0 [c]
Tok	[TBD]	0.0 [c]	0.0 [c]
PROJECT TOTAL		200	200

[a] Cathodic protection facilities are included with the temporary and permanent impacts associated with the MLBV, compressor station, and meter station sites. Test lead posts will be located along the permanent right-of-way.

[b] PMP = Point Thomson Gas Transmission Pipeline milepost, AMP = Alaska Mainline milepost

[c] Acreage used for the construction and operation of aboveground facilities is 0.0 when it occurs within the construction or operation footprint of another facility or the construction or permanent right-of-way for the pipeline. Additional acreage is noted if the aboveground facility is placed outside of these areas.

Compressor Stations

Construction of a typical compressor station will require clearing an area measuring approximately 1,100 feet by 1,100 feet, for a total of approximately 25 acres of land. A typical compressor station plot plan is included in Appendix 1B. Table 1.4.2-2 summarizes the land requirements at each compressor station. Section 1.6.4.2 summarizes construction of a compressor station site.

Custody Transfer Meter Stations

Construction of the PTU Meter Station and Prudhoe Bay Meter Station will occur within the boundaries of the Point Thomson field processing facility and GTP, respectively. Following construction, the meter station sites will consist of a 250-foot by 360-foot graveled area. The land required for the construction and operation of these meter stations will be located within their respective larger facility sites. Therefore, no additional land use impacts will occur beyond that already associated with the larger facilities (see Table 1.4.2-2). A typical meter station plot plan is included in Appendix 1B. Section 1.6.4.3 summarizes construction of a meter station site.

Mainline Block Valves

Construction and operation of MLBVs will occur within the pipeline right-of-way or a compressor or meter station site. Therefore, no additional land use impacts will occur beyond that already

DRAFT

associated with these facilities (see Table 1.4.2-2). A typical MLBV plot plan is included in Appendix 1E. Section 1.6.4.4 summarizes construction of a MLBV site.

Launchers and Receivers

Construction and operation of launchers and receivers will occur within a proposed aboveground facility site (e.g., GTP) (see Table 1.4.2-2). Therefore, no additional land use impacts will occur beyond those already associated with these facilities. A typical launcher/receiver is shown on the typical plot plan for the compressor stations and meter stations included in Appendix 1B. Section 1.6.4.4 summarizes construction of a launcher or receiver site.

Intermediate Gas Delivery Points

Construction of an intermediate gas delivery point will occur within the pipeline right-of-way or a compressor or meter station site (see Table 1.4.2-2). Therefore, no additional land use impacts will occur beyond those already associated with these facilities.

Cathodic Protection Facilities

The land required for cathodic protection facilities (groundbeds and rectifiers) will be within the pipeline right-of-way or a compressor station or meter station site (see Table 1.4.2-2). Therefore, no additional land use impacts will occur beyond those already associated with these facilities. Test lead posts will also be located along the permanent right-of-way.

1.4.3 ASSOCIATED INFRASTRUCTURE

1.4.3.1 Gas Treatment Plant

Module Staging Area

Land required for the module staging area described in Section 1.3.3.1 will impact 25 acres during construction (see Table 1.4.2-1). Following construction, APP will maintain the 25-acre area for operation.

Access Roads

As described in Section 1.3.3.1, APP will use existing, to-be-modified, and new roads to access the GTP site from West Dock. A total of 44 acres of land will be disturbed during construction and operation of access roads associated with the GTP (see Table 1.4.2-1). This includes 12 acres affected by widening an existing road and 32 acres affected by construction of the North Road and South Road. [Note: Access for mining borrow material and to the water reservoir is being evaluated and will be further defined in the Draft Report.]

Construction Camps

As described in Section 1.3.3.1, APP will construct a temporary camp to house up to 850 workers during construction of the GTP. The camp will be located with the area dedicated for the GTP site. Therefore, no additional land use impacts will occur beyond that already associated with this facility.

Borrow Sites

As described in Section 1.3.3.1, the material, sand, and gravel required for construction of the GTP and related facilities will be obtained from existing borrow sites. Therefore, no new land impacts will be associated with the use of these sites.

DRAFT

West Dock Modifications

The modifications to the dock facilities described in Section 1.3.3.1 will require gravel fill that will increase the dock footprint by approximately 10 acres. Land impacts for the dock modifications, including the modifications to DH-2, causeway road widening, dredging, and dredge disposal areas are outlined in Table 1.4.3-1.

TABLE 1.4.3-1

Alaska Pipeline Project
Impacts Associated with Dock Modifications [a]

Item	Length (miles)	Volume of Dredge or Fill Material (cubic yards)	Construction Impact (acres)	Operation Impact (acres)
West Dock, Dock Head (DH)-2	[TBD]	[TBD]	10.0	10.0
West Dock DH-3	[TBD]	[TBD]	0.0	0.0
Causeway Road Widening	[TBD]	[TBD]	[TBD]	[TBD]
Channel Dredging	[TBD]	[TBD]	[TBD]	[TBD]
Dredge Disposal	[TBD]	[TBD]	[TBD]	[TBD]
TOTAL	[TBD]	[TBD]	[TBD]	[TBD]

[a] [Note: The acreage for causeway road widening, dredging, and dredge disposal is being evaluated and additional information will be included in the Draft Report.]

1.4.3.2 Pipeline Facilities

Additional Temporary Workspaces

Table 1.4.3-2 lists the typical sizes of ATWS that will be used for the proposed APP. Each individual location requiring ATWS will be assessed and sized appropriately to account for terrain, soil conditions, site configuration, site-specific construction method, and construction seasonality. Therefore, the exact dimensions of each ATWS may vary from that presented in Table 1.4.3-2. Typical ATWS that will be required for feature crossings are shown on typical drawings provided in Appendix 1E.

TABLE 1.4.3-2

Alaska Pipeline Project
Typical Additional Temporary Workspace Dimensions Associated with the Pipeline

Segment/ Additional Temporary Workspace Location	Length × Width (feet)	Number of Workspaces Needed at Each Location
POINT THOMSON GAS TRANSMISSION PIPELINE		
Waterbody Crossing		
<50-feet-wide	150 × 65	4
>50-feet-wide	350 × 65	4
Road Crossing		
Bored and open-cut roads	150 × 35	4
Existing Utility Crossing	165 × 35	2
Stringing Truck Turnaround Site	200 × 80	1
Beginning or End of Construction Spread	600 × 250	1
Horizontal Bends	150 × 25	1
ALASKA MAINLINE		
Wetland Crossing		

DRAFT

TABLE 1.4.3-2

Alaska Pipeline Project
Typical Additional Temporary Workspace Dimensions Associated with the Pipeline

Segment/ Additional Temporary Workspace Location	Length × Width (feet)	Number of Workspaces Needed at Each Location
Push-pull summer construction (entry side)	(length of wetland)[a] × 50	2
Push-pull summer construction (exit side)	(length of wetland)[a] × 100	2
Waterbody Crossing		
<50-feet-wide	150 × 65	4
>50-feet-wide	350 × 65	4
Horizontal Directional Drill (HDD) entry and exit points	200 × 200	2
HDD pipeline drag section false right-of-way	(length of crossing)[a] × 100	1
Road Crossing		
Bored highways	200 × 50	4
Bored and open-cut, county, and private roads	150 × 35	4
Existing Utility Crossing	165 × 35	2
Stringing Truck Turnaround Site	200 × 80	1
Steep Side Slope	(length of slope)[a] × 65	2
Beginning or End of Construction Spread	600 × 250	1
Timber Decks	120 × 75	1
Horizontal Bends	150 × 25	1

[a] Dependent on crossing length of feature.

Except as otherwise requested, or where topographic or other factors impose setback constraints, ATWS will be set back approximately 50 feet from the edges of waterbodies and wetlands, except where the adjacent upland consists of actively cultivated or rotated cropland or other disturbed land. APP's actual breakdown of ATWS within the construction right-of-way (e.g., spoil storage areas, equipment travel lanes) will vary depending on site-specific conditions.

The specific locations and acreages of ATWS needed for the project are tabulated in Appendix 1H and depicted on the project alignment sheets included as an attachment to this filing. [Note: ATWS is under evaluation and information will be available in the Draft Report. Alignment sheets will be provided with the final application.]

Access Roads

Table 1.4-1 summarizes the construction and operational land impacts associated with either modifying existing roads or construction and operation of new permanent access roads. Table 1.4.3-3 lists the access roads by type and the area impacted. [Note: Access road requirements are being evaluated and additional information will be provided in the Draft Report.] Section 8.X of Resource Report 8 will provide a more detailed description of construction and operational impacts by land use type for each modified or newly created access road. Figures in Appendix 1E includes a typical access roads associated with APP.

DRAFT

TABLE 1.4.3-3

Alaska Pipeline Project
Land Requirements and Impacts at Modified and New Access Roads Associated with the Pipeline
[Note: Table data is pending and will be further defined in the Draft Report.]

Segment/Borough or Census Area/Road Name	Milepost [a]	Road Type/Status [b]	Land Affected During Construction (acres)	Land Affected During Operation (acres)
POINT THOMSON GAS TRANSMISSION PIPELINE				
North Slope Borough				
ALASKA MAINLINE				
North Slope Borough				
Yukon–Koyukuk Census Area				
Fairbanks North Star Borough				
Tanana–Tetlin Census Area				

[a] PMP = Point Thomson Gas Transmission Pipeline milepost, AMP = Alaska Mainline milepost
[b] E = Existing; N = New; T = Temporary; P = Permanent

Helipads

Each helipad will be constructed of borrow material with approximate dimensions of 55 feet long by 55 feet wide. All affected land will be within the permanent, operations right-of-way of the pipeline or a compressor station or camp site. Therefore, no additional land use impacts will occur beyond that already associated with these facilities. Helipad locations are identified in Section 1.3.3.2. Appendix 1E includes a typical drawing of a helipad. Section 8.X of Resource Report 8 will provide a description of construction and operational impacts by land use type for each helipad associated with APP.

Airstrips

APP does not anticipate the need to upgrade any existing commercial airports for the project, but may need to make minor upgrades to some existing (non-commercial) airfields. [Note: APP is evaluating airstrip requirements and will provide additional information in the Draft Report.] Section 8.X of Resource Report 8 will provide a description of construction and operational impacts by land use type for each airstrip associated with APP.

Construction Camps, Pipe Storage Areas, and Contractor Yards

As discussed in Section 1.3.3.2, APP will construct temporary camps, pipe storage areas, and contractor yards at various locations to support construction of APP. In general, construction camps will range in size from [TBD] to [TBD] acres, pipe storage yards will range in size from [TBD] to [TBD] acres, and contractor yards will range in size from [TBD] to [TBD] acres. [Note: Acreage requirements for camps, pipe storage areas, and yards are being evaluated and will be

DRAFT

further defined in the Draft Report.] Appendix 1E includes typical drawings of typical construction camp, pipe storage area, and contractor yard layouts.

Table 1.4.3-4 lists the land requirements and impacts associated with temporary camps, pipe storage areas, and contractor yards required for the APP. These will, to the extent possible, be located at previously disturbed sites. Section 8.X of Resource Report 8 will provide a detailed construction and operational impacts by land use type for each construction camp, pipe storage area, and contractor yard associated with APP.

TABLE 1.4.3-4

Alaska Pipeline Project
Preliminary List of Land Requirements and Impacts at Construction Camps, Pipe Storage Areas, and Contractor Yards Associated with the Pipeline

[Note: Table data is pending and will be further defined in the Draft Report.]

Segment/Borough or Census Area/Facility Name	Milepost [a]	Distance (miles) and Direction from Pipeline	Land Affected During Construction (acres)	Land Affected During Operation (acres)
POINT THOMSON GAS TRANSMISSION PIPELINE				
North Slope Borough				
Point Thomson East Camp				
Point Thomson Central 1				
Point Thomson Central 2				
Point Thomson West Camp				
ALASKA MAINLINE				
North Slope Borough				
Deadhorse Camp				
Franklin Bluff Camp				
Happy Valley Compressor Station				
Happy Valley Camp				
Happy Valley				
Galbraith Lake				
Galbraith Lake Camp				
Galbraith Lake Compressor Station				
Atigun River Camp				
Atigun River				
Chandalar Camp				
Chandalar Shelf				
Yukon-Koyukuk census area				
Dietrich Camp				
Dietrich				
Coldfoot Camp				
Chapman Creek Compressor Station				
Prospect Creek				
Kanuti River (Old Man) Camp				
Dall River				
Fort Hamlin Hills Compressor Station				
Five Miles Camp				
Five Miles				
Hess Creek				
Livengood Camp				

DRAFT

TABLE 1.4.3-4

Alaska Pipeline Project
Preliminary List of Land Requirements and Impacts at Construction Camps, Pipe Storage Areas, and Contractor Yards Associated with the Pipeline
[Note: Table data is pending and will be further defined in the Draft Report.]

Segment/Borough or Census Area/Facility Name	Milepost [a]	Distance (miles) and Direction from Pipeline	Land Affected During Construction (acres)	Land Affected During Operation (acres)
Tatalina River Compressor Station				
Tatalina River				
Fairbanks North Star Borough				
Treasure Creek				
Fort Wainwright				
Little Chena Camp				
Johnson Road Compressor Station				
Johnson Road Camp				
Salcha River				
Tanana-Tetlin census area				
Rosa Creek Camp				
Quartz Lake				
Delta Junction Camp				
Arrow Creek				
George Lake Compressor Station				
George Lake Camp				
Sears Creek				
Cathedral Bluffs				
Tok Camp				
Tok River				
Tetlin Junction Compressor Station				
Beaver Creek Camp				
Northway Junction				
Seaton				

[a] PMP = Point Thomson Gas Transmission Pipeline milepost, AMP = Alaska Mainline milepost.

DRAFT

Borrow Sites

Table 1.4-1 summarizes the total land requirements associated with construction and operation of borrow sites, and Appendix 1F identifies the borrow site locations and approximate acreage for each individual site that may be used. [Note: Identification of the sites that will be used, their current status, and the approximate acreage required is under evaluation and will be further defined in the Draft Report.] Section 8.X of Resource Report 8 will provide a detailed construction and operational impacts by land use type for each borrow site associated with APP. After construction, borrow sites will be left in place in accordance with land use agreements.

1.5 CONSTRUCTION SCHEDULE

Figure 1.5-1 summarizes APP's preliminary construction schedule. Commencement of construction is targeted for 2014 with GTP site preparation. First gas in-service date is projected for 2020. This construction schedule is preliminary and subject to change. The

specific dates listed in this resource report are consistent with the preliminary schedule, but also are subject to change.

1.5.1 GTP SITE PREPARATION

Site preparation at the GTP will commence after receipt of the required permits and authorizations, and will generally proceed as follows:

- Infrastructure (Civil) Construction: Infrastructure construction, including establishing borrow sources, stockpile granular material, and constructing contractor yards, material storage sites, and access roads, will start in 2014. The majority of this work will be associated with preparation of granular material, site clearing, preparing rough grade, and constructing gravel pads, access, and ice roads to support the aboveground facility construction efforts.
- Channel Dredging: Initial dredging is anticipated to require approximately 45 days of near-shore open water at Prudhoe Bay and will be performed during the summer of 2016 prior to Sealift Number 1. Prior to all sealifts (or at first open-water at Prudhoe Bay) in 2017, 2018, and 2019, maintenance screeding/dredging will be performed as required to return the channel to specification width and depth.

1.5.2 GTP SITE CONSTRUCTION

GTP site construction will commence after receipt of the required permits and authorizations, and will generally proceed as follows:

- GTP site preparation, dock and road modifications, and dredging will start in 2014 as noted in Section 1.5.1 in preparation for Sealift No. 1. Modules are planned for maximum completion at the fabrication sites in order to minimize the time required for facility installation on the North Slope. Three consecutive sealifts and corresponding construction periods are planned to stay within the proven capacity of the module fabrication yards. Sealifts No. 2 and No. 3 will arrive on the North Slope during 2018 and 2019, respectively. As installation of the modules is completed each year, the facilities will be released to Operations for final commissioning and startup.

DRAFT

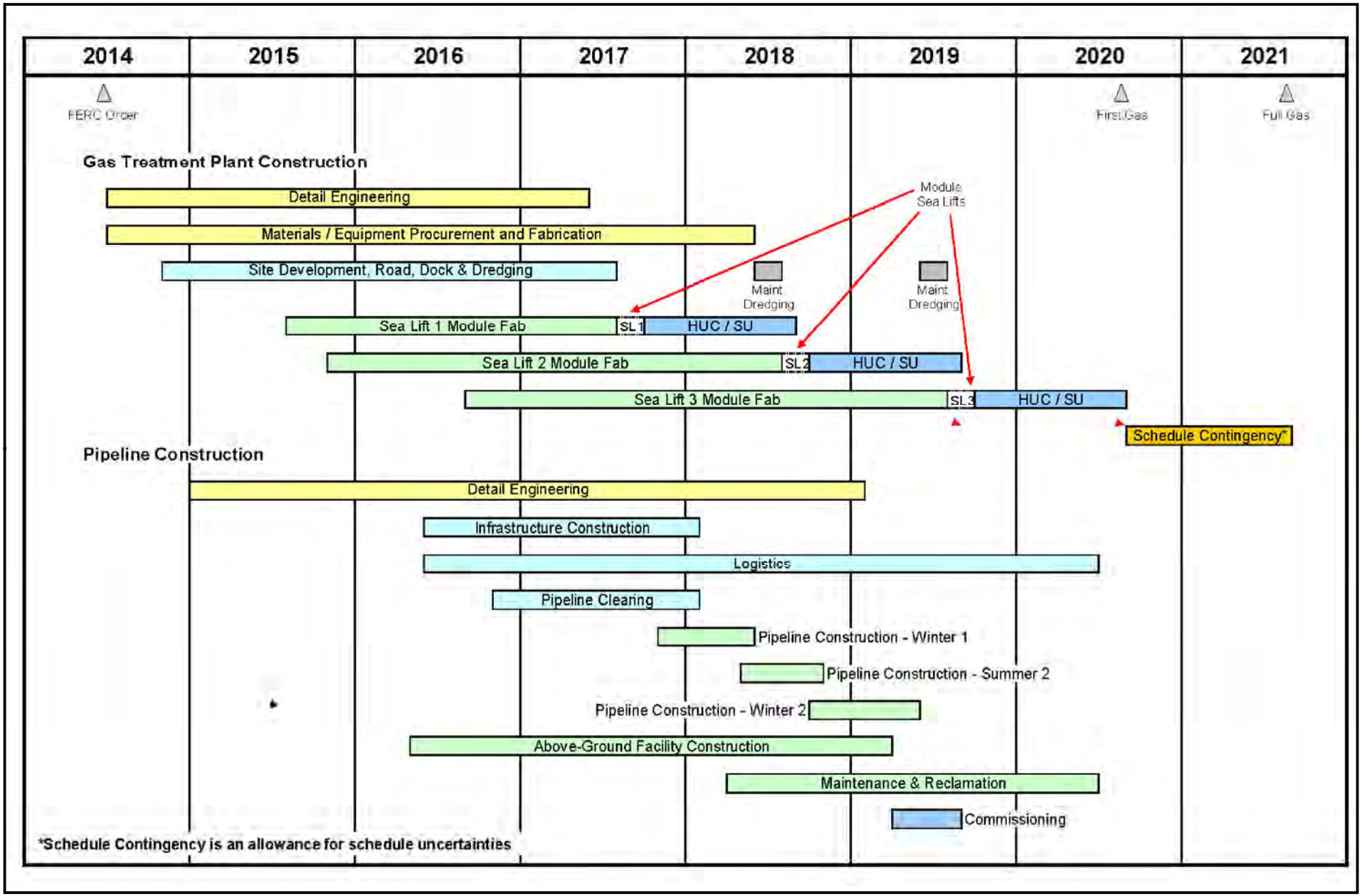

Figure 1.5-1

Alaska Pipeline Project

Preliminary APP Construction Schedule

1.5.3 PIPELINE CONSTRUCTION

Pipeline construction will commence after receipt of the required permits and authorizations, and will generally proceed as follows:

- Pipeline Construction: Pipeline Construction: The actual construction of pipeline facilities would occur over 2 years; however, APP is continuing to evaluate optimization of this schedule. Prior to pipeline construction, infrastructure construction, logistics, and right-of-way clearing will start in 2016.
- Compressor and Meter Station Construction: Compressor and meter station construction will be completed in the same timeframe as pipeline construction.

1.6 CONSTRUCTION ACTIVITIES

All APP facilities will be designed, constructed, and operated in accordance with all applicable laws and regulations.

APP is developing a project-specific Upland Erosion Control, Revegetation, and Maintenance Plan (APP Plan) and a Wetland and Waterbody Construction and Mitigation Procedures (APP Procedures). The APP Plan and Procedures will consider applicable provisions of the 2003 versions of the FERC's Upland Erosion Control, Revegetation, and Maintenance Plan and Wetland and Waterbody Construction and Mitigation Procedures. [Note: APP's Plan and Procedures are being developed and will be provided in the Draft Report.]

The following subsections describe the logistical activities that will occur during construction; the typical and special procedures APP will use for pipeline construction; aboveground facility construction procedures; infrastructure construction procedures; and anticipated construction workforce requirements.

1.6.1 LOGISTICS

Logistics activities will include the transporting of people, equipment, construction materials, and supplies to construction sites via water, road, rail, or air. Logistics activities will begin prior to infrastructure development and continue through construction. Construction personnel will be mobilized via air or ground transportation.

Construction contractors will mobilize and demobilize construction equipment to and from specific construction sites throughout 2014 to 2021. The majority of this equipment will be brought into Alaska via ocean barge or ship. The ports that are located in the southern portion of Alaska and are accessible by the Gulf of Alaska will be the likely points of entry. [Note: More detail on the project logistics plan will be provided in the Draft Report.]

It is also expected that the West Dock, located near Prudhoe Bay, will be an entry point for the equipment needed to construct the GTP. Once the GTP equipment has landed onshore, most of the equipment will be transported by truck and specialized module transport equipment to the specific construction sites.

The construction material and mechanical equipment that make up the pipeline and related aboveground facilities include line pipe, compressor units, piping, and modular buildings. Once the material and equipment arrives in Alaska, it will be transported by rail and truck to be delivered to the specific predetermined yard locations. The ports that are located in the

DRAFT

southern portion of Alaska and are accessible by the Gulf of Alaska will be the likely point of entry.

Table 1.6.1-1 summarizes material and equipment expected to be transported to construction sites of both the pipeline and aboveground facilities, and the associated number of truckloads to transport such items.

TABLE 1.6.1-1

Alaska Pipeline Project
Summary of Material and Equipment Transported to Construction Sites
[Note: Table data is pending and will be further defined in the Draft Report.]

Item	Number of Loads	Weight or Bulked Volume of Material
POINT THOMSON GAS TRANSMISSION PIPELINE		
Plane loads of construction workforce[a]		800 roundtrip tickets
Bus loads of construction workforce[b]		1,300 roundtrip tickets
Line pipe		21,000 tons
Aboveground facility mechanical equipment		1,150 tons
Pipeline and facility construction equipment		12,000 tons
Camps		2,600 tons
Fuel and fuel tanks		4,000,000 U.S. gallons
Granular material		650,000 cubic yards
ALASKA MAINLINE		
Plane loads of construction workforce[a]		
Bus loads of construction workforce[b]		
Line pipe		
Aboveground facility mechanical equipment		
Pipeline and facility construction equipment		
Camps		
Fuel and fuel tanks		
Granular material		
GAS TREATMENT PLANT		
Plane loads of construction workforce		
Modules shipped via ocean barges		
Temporary field erected buildings		
Pilings		
Transportation steel		
Misc. pre-engineered structures		
Fuel and fuel tanks		
Consumables and supplies		
Construction equipment		

[a] A typical commercial plane can carry 175 people.
[b] A typical commercial bus can carry 45 people.

A storage yard is planned to be located near Fort Wainwright and act as a central stockpile point for pipe and construction equipment being transported from the Gulf of Alaska marine ports. APP will start stockpiling pipe approximately one year prior to pipeline construction. Construction equipment will start to be stockpiled prior to any construction commencing, including infrastructure and clearing activities.

DRAFT

GTP materials and equipment (including construction materials and equipment) will be transported to site by barge and truck. The following summarizes some of the transport constraints and limitations.

1.6.1.1 Seasonal Ice-Window Open and Close Dates

The open-water transit window for sealift barges to Prudhoe Bay is on average about 45 days. The open and close dates vary from year to year and are dependent on a variety of factors including offshore directional winds. Barges will depart for Prudhoe Bay when safe and authorized by marine warranty surveyors.

1.6.1.2 Haul Road Truck Traffic

Dalton Highway is the sole arterial highway providing access to Prudhoe Bay. Traffic control and scheduling may be required during periods of high traffic volume. APP will coordinate with the ADOTPF and U.S. Fish and Wildlife Service to address any traffic impacts on the public or wildlife.

1.6.1.3 Barge Traffic and Whaling

GTP will develop procedures to ensure barge traffic in the Prudhoe Bay area does not conflict with whaling activities. Additional information regarding marine species and potential project impacts will be described in Section 3.X of Resource Report 3.

1.6.2 TYPICAL PIPELINE CONSTRUCTION PROCEDURES

The following provides a description of typical pipeline construction procedures that will be implemented. These procedures will be modified as necessary to comply with site-specific environmental considerations. Where applicable, information distinguishing typical summer construction procedures from typical winter construction procedures are provided with pipeline construction procedures at special or unique features (e.g., wetlands, waterbodies, road crossings) as discussed in Section 1.6.3. Figure 1.6.2-1 depicts a typical construction sequence.

1.6.2.1 Surveying

Initially, the pipeline centerline and limits and right-of-way boundaries will be staked, including construction and ATWS areas which will require the use of permitted access roads. This will also include the staking and/or fencing of known archaeological sites, wetland areas, and water crossing boundaries, as well as other environmentally sensitive and other special areas requiring protection during the pipeline construction process. Activities to locate underground utilities will also be performed prior to construction, as part of the construction survey process.

Surveying and staking activities will also be required during pipeline construction to mark the locations of changes in pipe wall thickness, pipeline crossings, utility crossings, test lead installation locations, buoyancy control (start and end locations), and bore pit locations.

The surveyors will conduct as-built surveys during pipeline construction to document depth of cover, weld locations, and other as-built information.

DRAFT

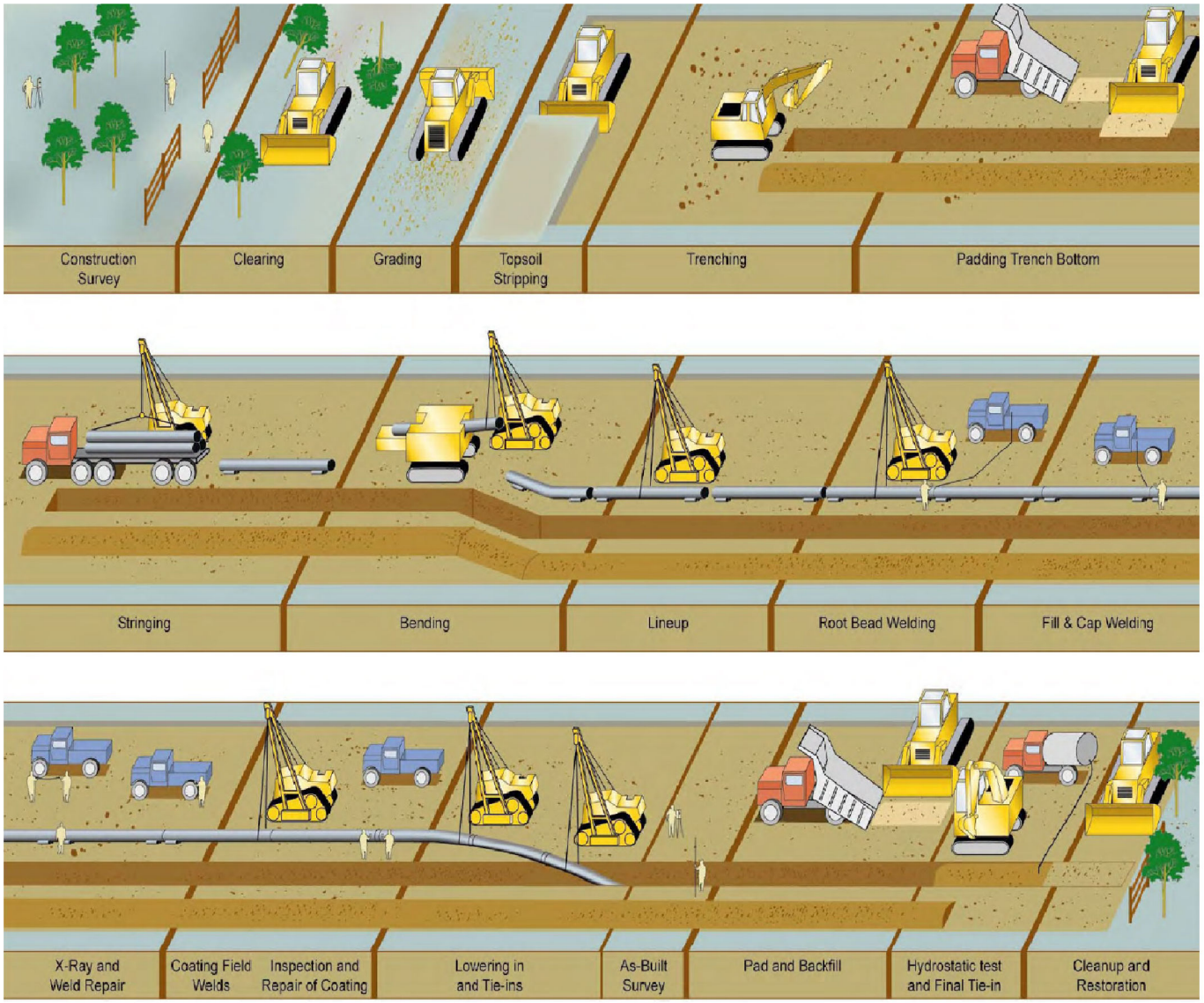

Figure 1.6.2-1

Alaska Pipeline Project

Typical Construction Sequence

1.6.2.2 Clearing

Clearing activities will typically occur in the winter season prior to the pipeline installation season, and will include removing trees and mulching or burning brush on the construction right-of-way and at ATWS areas. For the most part, vegetation will be removed using heavy equipment. The specialized equipment that may be used includes the feller-buncher, mulchers, de-limbers, hydro-axes, and cable and grapple skidders. Some handwork with power saws will also be required.

The clearing activity for a winter pipe installation project is essentially the same as that for a summer activity. Snow management will be required for winter construction. The right-of-way will normally be cleared the winter prior to pipe installation activities. In this case, generally, the right-of-way will not be grubbed, that is root structures will generally not be removed until the season of pipe installation.

Access to the right-of-way for personnel and equipment will be required for clearing. Winter access will include the installation of snow and log fill ramps, and bridges and culverts where required for crossing drainages and watercourses. Summer access may include use of mats, log corduroy, geotextile, or combinations of them, and may be overlain with imported borrow material on the work side and travel lane of the pipeline construction right-of-way to ensure heavy construction equipment and support vehicles can cross.

Temporary environmental and erosion control mitigation measures will then be installed. Fences that cross the right-of-way will be removed and replaced with temporary fences and gates to accommodate passage of personnel, pipeline construction equipment and support vehicles along the right-of-way.

Large-sized timber may be decked on, or immediately adjacent to, the right-of-way. The burning or mulching of non-salvaged vegetation will be completed following clearing activities.

During winter construction, when little natural light is available for much of the day, artificial lighting provided with portable light towers will be used for clearing and subsequent activities.

1.6.2.3 Grading

Work surface grading is necessary to level the right-of-way for the safe use of heavy equipment while handling of pipe. Grading is also necessary to level side slopes across the work surface and to reduce the inclination of longitudinal slopes along the work surface. In some cases shoo-flies[5] will be required to provide less hazardous routes that bypass sections of extremely difficult topography.

The loose surface layer of native material on the right-of-way is often referred to as “duff.” Duff will normally be bladed to one or both sides of the right-of-way and stored in windrows for later redistribution across the disturbed area during cleanup operations. This duff material aids rehabilitation efforts by enhancing re-growth of vegetation, and assists in mitigating surface erosion on the right-of-way. Additional temporary environmental and erosion control mitigation measures will also be installed as required in accordance with the approved project-specific plans and procedures (see Section 1.6 and Appendices 1I and 1J). For summer construction in agricultural lands, topsoil may be stripped from the entire width of the right-of-way using dozers, excavators, and/or graders, and moved to one or both sides of the right-of-way, stored in windrows, and segregated from stockpiled mineral soils and trench spoil. The depth of topsoil

[5] A temporary, short access route around a small construction area or other obstruction.

DRAFT

removal will depend upon site-specific soil conditions, land use requirements, and project specifications. The width of area required for topsoil storage will depend on these variables.

In areas where grade rock is encountered, the surface of the right-of-way will be ripped with ripper tractors. If it cannot be ripped, it will be drilled and blasted after first being stripped of any organic and mineral soil overburden. Grading of rock areas may be undertaken a season or more in advance of pipe installation.

During winter seasons, wetlands or soils otherwise unstable due to a high moisture content will be frost packed to promote deeper frost penetration in an effort to improve surface bearing capacity so that heavy equipment and vehicle loads can be safely supported. In some instances the use of log corduroy and/or geotextile products with import fill might be required to bridge the wet or otherwise unstable areas to ensure that heavy construction equipment and support vehicles can pass.

During the winter period when there is little daylight, artificial lighting including that mounted on equipment and support vehicles augmented with stationary lighting from light towers will be required to support the grading activities.

During summer construction periods, crossing wetlands or unstable soils due to high moisture content may require the use of mats, log corduroy, geotextile products, or combinations of them to strengthen the work surface to support heavy construction equipment.

Winter season grading activities are enhanced by taking advantage of frozen soil conditions to support construction equipment and vehicles. For thaw-stable soils[6], the right-of-way preparation activity will begin by driving frost into the ground so that heavy construction equipment will be supported. For thaw sensitive soils[7], initial preparation activities might include installation of a gravel or snow/ice working surface. During winter construction, snow and organic material may be windrowed over the trench line to reduce seasonal or mechanical penetration of frost. The area is bladed away just prior to trenching activities.

1.6.2.4 Ice and Snow Work Pads and Access Roads

In certain tundra areas and wetland areas along the right-of-way a winter work pad installation will be required. Winter work pads and roads may be constructed of compacted snow, ice aggregate, mixtures of snow and water, manufactured snow, or ice created by flooding the tundra surface to achieve a design elevation and will be described in Section 2.X of Resource Report 2.

Initial work activity on the right-of-way will include surveying and marking the right-of-way limits and ATWS areas. Depending upon the volume of snow on the right-of-way, snow will be either windrowed to the side or consolidated (i.e., packed down) using snow cats or snowmobiles. This consolidation of the snow pack will help hasten frost penetration through the active layer to create a frozen and stable winter work pad surface for equipment travel and pipeline construction activities. Dragging operations will be carried out to substantially level the surface by compacting the snow. Low pockets will be filled in. Water from approved water sources will then be added to the snow to create a frozen snow/ice surface.

---

6 Permafrost in bedrock, in well drained, coarse-grained sediments such as glacial outwash gravel, and in many sand and gravel mixtures. Subsidence or settlement when thawed is minor, foundation remains essentially sound.

7 Perennially frozen ground which, upon thawing, would experience significant thaw settlement and suffer loss of strength to a value significantly lower than that for similar material in an unfrozen condition.

Access roads will be developed to the approved water sources to obtain water for manufacturing of snow; developing the winter work pad on the right-of-way; acquiring ice aggregate from the frozen surfaces of approved waterbodies to use to fill depressions on the right-of-way and on winter access roads.

Ice aggregate will be made by using a scarifier to scratch the ice cover on freshwater ponds and lakes. The chips could be used alone or mixed with water. Ice aggregates and manufactured snow will be hauled to the right-of-way and graded to level the right-of-way or access road or used to build up lower areas. Water will then be added to the ice aggregates to create a solid frozen base to which more snow and water is added to create a surface suitable for the traffic.

Snow fencing may be installed along the side of the right-of-way to collect sufficient snow for the construction of a winter work pad. Snowmaking equipment such as that used to make snow on ski hills may also be utilized.

Ice bridges for crossing waterbodies will be constructed by flooding the waterbody to the required design thickness. Some ice bridges may be five feet or more thick to ensure that heavy equipment can safely cross the waterbody. Ice bridge construction may require the addition of snow, ice aggregates, and water, to the surface of the existing ice at the crossing location. For ice bridges across fast-moving waterbodies, regular maintenance will include regularly checking the thickness of the ice to identify any under-ice scouring and unsafe conditions caused by the fast-flowing water under the ice.

Once in use, winter work pads and access road will require maintenance to repair damage caused by the tracked equipment. Maintenance of a work pad includes adding snow and water, grading and, in some cases, adding ice aggregate as fill. Grading or snow blowing to remove standing snow drifts from the right-of-way will help prevent damage to the surface of the winter work pad and to ensure that good trafficable conditions are maintained.

During the late winter season, use of the access or right-of-way may have to be restricted to the nighttime to ensure stable road conditions.

Winter snow and ice work pads and roads will be decommissioned at the end of each winter season. Typically this will happen within days of being notified of the tundra-travel closing window. Generally the snow and ice work pad will be left in place to melt at the end of the winter season. The pad will be breached at watercourses to prevent damming.

1.6.2.5 Erosion Control on the Right-of-Way During Construction

The right-of-way will be stabilized during construction to reduce surface erosion and siltation. This stabilization work will be done in accordance APP's Plan using a "Tool Box" process, in which installation and maintenance of temporary environmental mitigation measures will depend on site-specific conditions and needs. For erosion control efforts, this may include installation of diversion berms, surface drainage ditches, French drains, silt fence, erosion control matting, straw bales, or straw pipes, and other means that have traditionally been used to mitigate and control surface erosion.

During winter construction, these measures will be left in place and supplemented as required through the end of construction to mitigate surface soil erosion that might occur as a result of the spring thaw and snow melt or summer precipitation events.

[Note: More information discussing the placement of erosion controls is discussed in APP's project-specific Plan, which will be provided in the Draft Report.]

DRAFT

1.6.2.6 Stringing

Hauling and stringing of pipe joints will take place as access to, and grading of, the right-of-way is progressed. In certain trench soil conditions, such as where drilling and blasting of the trench is required, stringing will take place after trenching. Individual pipe lengths (also referred to as joints) are nominally 40, 60, or 80 feet in length. Weights of pipe loads will dictate the number of joints of pipe per load that can be transported to the right-of-way for stringing. Pipe will normally be transported for stringing on the right-of-way by trucks with trailers. In some areas of challenging terrain, tracked pipe carriers may be utilized. End caps will be used to keep snow, dirt, and debris out of the pipe.

1.6.2.7 Bending

Pipe bending operations will follow pipe stringing. The bending crew will bend the pipe to fit the vertical profiles and horizontal alignments of the graded right-of-way. Typically, manufactured fittings will be used where field bends cannot be bent enough to accommodate the desired bend angle.

A hydraulic pipe bender will be pulled along the right-of-way by a pipe-layer (also referred to as a sideboom or dozer) and positioned at intervals along the right-of-way. At each location, individual pipe joints will be carried to the bending machine by a pipe-layer, inserted, and bent to the required angle as identified by the bending engineer.

1.6.2.8 Production Welding

Pipe joints will be set up for field production welding. Generally, production welding will be done using a mechanized welding system. Multiple welding passes will be used to complete the weld as specified in the qualified weld procedures. Each weld will be examined using a qualified radiographic or ultrasonic non-destructive examination procedure. Qualified and certified non-destructive examination inspectors will be engaged to perform this work. Welds that do not meet specification will be repaired or cut out and replaced in accordance with specification and applicable code requirements.

All welding will be in compliance with Title 49 CFR Part 192, and API Standard 1104 “Welding of Pipelines and Related Facilities” and project-specific requirements.

1.6.2.9 Joint Coating

After the pipe is field welded, non-destructively examined, and accepted, field girth welds will be sandblasted and heated as necessary with electric heating coils to a specified temperature and coated. The field joint coating materials and application process will be appropriately matched to the pipe.

Each section of welded pipe will be inspected with an electrical device called a holiday detector. A holiday is a flaw in the external pipe coating. If a holiday is detected, an audible signal is heard to indicate a flaw to be repaired. This activity is also referred to as the “jeeping” operation. This non-destructive examination will identify any coating flaws or defects. Pipe coating damage identified will be repaired in accordance with approved procedures.

To maintain acceptable minimum temperature requirements, coating supplies and mixing equipment will as required be transported in heated truck units.

DRAFT

1.6.2.10 Trenching

The trench will be excavated with bucket wheel or chain trenching machines, or track-mounted excavators.

Track-mounted mechanical rippers, rock hammers, or rock trenchers will be used to fracture and excavate rock or frozen soil. Drilling and blasting techniques will be required where other means are not practical.

In winter, pipe will typically be welded ahead of trenching, except where blasting is required. This sequence results in the trench remaining open for a short time before the welded pipe sections are lowered in and the trench will be less likely to fill in with snow. If blasting is required, it will take place prior to stringing and welding.

Typical trench configurations are provided in Appendix 1E.

1.6.2.11 Lowering In, Tie-ins, and Backfilling

Before welded pipe sections are lowered in, the trench will be inspected to ensure it is free of rocks and other debris that could damage the pipe or its protective coating. Dewatering or removal of snow might be necessary to allow for inspection of the trench bottom.

In rock trench conditions, or where soil conditions include the presence of boulders or cobbles, foam pillows or granular bedding material will be placed on the trench bottom before the pipe sections are lowered in. Suitable bedding and padding material will be placed around the pipe to protect the pipe and coating from damage. Padding machines and spoil pile processors, which screen out or crush large cobbles and rocks, may be used to provide bedding and padding. Other pipe protection measures such as a rock shield material might be installed before the lowering in of pipe strings. In some instances, select bedding and padding material will be imported. Topsoil or loose surface materials will not be used as padding material or as trench backfill.

After the pipe sections are lowered into the trench, tie-in welds will be performed to join together welded sections of pipe. Similar to production welding discussed above, tie-in welds will be done in accordance with qualified weld procedures and non-destructively examined in accordance with qualified procedures. Trench breakers (typically stacked sand bags or sprayed-in-place foam) will be installed in the trench on longitudinal slopes at specified intervals to prevent subsurface water movement along the pipe trench. The trench will then be backfilled. Import fill may also be required to supplement native backfill and compensate for thawing and settling of ice-rich trench spoil material.

Typical trench configurations are provided in Appendix 1E.

1.6.2.12 Testing and Final Tie-Ins

After backfilling, the pipeline will be hydrostatically pressure tested. Sections of pipeline to be tested as single segments will be determined by water availability and terrain contour conditions. Water for pressure testing will be obtained from approved water sources and will be described in Section 2.X of Resource Report 2.

During winter conditions, hydrostatic testing will be performed using heated water or with freeze-depressant additives mixed with hydrostatic-test water. When freeze-depressant additives are used, after testing, the hydrostatic-test water may be distilled to separate the additives from the

DRAFT

water, or it may be disposed of at an approved disposal well. In addition, there will be a requirement for sheltering and heating exposed pipe and test heads during winter conditions.

After completion of the pressure test, the water will be discharged in accordance with applicable permits (to be provided in Section 2.X of Resource Report 2 for additional information on APP's hydrotest discharge plans and applicable requirements.) Once the pipeline is dewatered, the pipeline will be cleaned and dried using mechanical and foam tools referred to as pigs that are propelled through the pipeline with pressurized air. Test heads will then be removed and the final tie-ins completed. Refer to Appendix 1E for typical drawings depicting typical hydrostatic test points and a typical water-discharge layout.

1.6.2.13 Cleanup and Rehabilitation

Initial cleanup will begin after backfilling of the trench has been completed and will continue as weather and site ground surface conditions allow in accordance with APP's Plan (Appendix 1I) and continue until permit conditions are met. In some cases, final cleanup will be completed during subsequent summer or winter seasons.

Construction debris will be gathered and disposed at approved off-right-of-way disposal sites. Surface drainage patterns will be re-established. In most areas, a crown of trench backfill material will be centered over the trench to compensate for settling of the backfill material as it consolidates. Surface cross-drainage patterns will be re-established where the trench line has been crowned.

Segregated loose organic materials or stripped topsoil will be spread over the surface of the right-of-way. Permanent erosion control devices appropriate for the application will be installed.

After permanent erosion control devices have been installed, disturbed and non-cultivated work areas may be seeded using approved seed mixes. All rehabilitation will be in accordance with project-specific revegetation and rehabilitation plans. Rehabilitation will also address sites requiring special attention such as wetland/riparian areas and those areas that will require reforestation.

Markers showing the location of the pipeline will be installed at fence and road crossings in order to identify the owner of the pipeline and convey emergency contact information in accordance with applicable governmental regulations, including DOT safety requirements and project-specific specifications. Special markers providing information and guidance to aerial patrol pilots will also be installed.

[Note: APP will provide more information regarding permanent erosion control and reclamation procedures in APP's Plan in the Draft Report.]

1.6.3 SPECIAL PIPELINE CONSTRUCTION PROCEDURES

The following provides a description of pipeline construction procedures typically conducted at special or unique locations (e.g., wetlands, waterbodies, road crossing). [Note: More information distinguishing typical summer construction procedures from typical winter construction procedures, if applicable, will be provided in the Draft Report.]

1.6.3.1 Wetland Crossings

Much of the project in Alaska crosses large expanses of wetland, particularly north of Delta Junction. Generally, the pipeline construction techniques used in wetlands will depend on site-specific conditions at the time of construction, including season/weather, the degree of soil

DRAFT

saturation, presence and extent of permafrost, soil stability, and wetland type. In some cases, such as crossing certain wetlands in the winter, site-specific conditions may warrant utilizing conventional upland cross-country construction. In other cases, site-specific conditions may warrant utilizing special wetland construction techniques. APP Procedures (Appendix 1J) identify where conventional upland cross-country construction will occur, and where modifications to those the conventional techniques will be needed.

Summer Conditions

[Note: Project-specific construction specifications are being developed for construction in wetland areas/crossings under summer conditions. APP is consulting with appropriate regulatory agencies and will provide additional descriptions of its proposed summer wetland crossing procedures in the Draft Report.]

Winter Conditions

[Note: Project-specific construction specifications are being developed for wetland crossings under winter conditions. APP is consulting with appropriate regulatory agencies and will provide additional descriptions of its proposed winter wetland construction and crossing procedures in the Draft Report.]

1.6.3.2 Waterbody Crossings

The Alaska Mainline and PTGP will cross a total of about 40 perennial waterbodies and about 380 intermittent watercourses. Section 2.X of Resource Report 2 will list the waterbody crossings that have currently been identified. Appendix 1E provides typical waterbody crossing drawings. [Note: Further analysis of field data already collected or to be collected in 2011 is required to refine these numbers. More information will be provided in the Draft Report.]

APP will cross waterbodies using one of the six crossing methods described below, and as specified in APP's Procedures (Appendix 1J). Section 2.X of Resource Report 2 will list the construction method anticipated for each crossing. Crossing installations will be performed in accordance with construction specifications and all terms and conditions associated with each crossing permit. Major waterbodies (those greater than 100 feet in width) and other crossings deemed to be sensitive will be listed in Section 2.X of Resource Report 2. If these waterbodies are dry or frozen to the bottom when crossed, APP proposes to use conventional upland cross-country construction techniques and procedures.

ATWS may be required on both sides of waterbodies to stage construction equipment and materials, and to fabricate the crossing section. The ATWS will typically be located at least 50 feet from the water's edge, except in those cases where the adjacent upland areas are actively cultivated or are used as rotated cropland, or other disturbed land.

Based on the results of the waterbody analysis completed to date, the project has identified a list of crossings by milepost where topographic or other site-specific factors will preclude the standard 50-foot setback between the ATWS and the edges of waterbodies. Section 2.X of Resource Report 2 will list the locations of ATWS that will require deviation from the standard 50-foot setback.

During clearing activities, temporary bridges will be installed, where necessary, across waterbodies to allow construction equipment and personnel that follow the clearing activities to cross. This will be the case if pipe installation work is being performed during the same construction season as the clearing. If the clearing activities are performed during an out-of-sequence season relative to the pipe installation activities, any equipment/vehicle bridges

installed to support the clearing activities will be removed from perennial waterbodies except if designed to the specified design flood return period. Temporary construction bridges will then be reinstalled across these waterbodies during a subsequent construction season prior to the start of the right-of-way grading or other right-of-way preparation activities.

A number of bridging methods could be used depending on season of use, and flow and width of the waterbody:

- Single-span bridges are rigid metal structures that span a water body from bank to bank without in-stream support. Multi-span bridges are rigid metal structures that span a waterbody from bank to bank with one or more in-stream supports.
- Portable sectional bridges are similar to single-span and multi-span bridges. However they will be assembled in short sections to complete the span from bank to bank. Bailey and Flexifloat® are examples of portable sectional bridges.
- Ice bridges involve building up a sufficient thickness of ice on a waterbody to support the movement of construction equipment.
- Earth and snow fills involve filling the waterbody channel with earth or snow to provide a level surface for the construction equipment to cross. If there is flow in the waterbody, culverts can be incorporated into the fill to allow the flow to be maintained. This is referred to as a ramp and culvert bridging structure.
- Synthetic or wooden mats could also be used to cross waterbodies that are frozen to the bottom or have no flow. The mats provide support for construction equipment where the bed of the waterbody is soft.

Temporary bridges will be removed when construction and rehabilitation activities are complete.

Refer to Appendix 1E for typical drawings depicting typical equipment crossing techniques.

Open-Cut Crossing Method

The standard open-cut or wet-trench crossing method will involve trenching through the waterbody while water continues to flow (unless dry or frozen) through the trench area. Before construction of the crossing begins, the crossing section of pipe will be fabricated, and any required pipeline concrete coating applied to the pipe section in an adjacent, approved extra workspace, located outside the riparian zone of the waterbody. Typically, for smaller waterbody crossings, in-water durations are shortest for an open-cut as compared to isolation methods.

Depending on the width and depth of the excavation, tracked excavators or dragline buckets will then be used to excavate a trench in the flowing waterbody, working from one or both of the crossing banks. Where the waterbody is too wide to excavate the trench from the banks, excavation equipment might operate from within the waterbody with approval from appropriate regulatory agencies. Equipment operating within the waterbody will be limited to that absolutely necessary to install the crossing. During these operations, waterbody flow will be maintained at the crossing location in accordance with approved site-specific requirements.

Trench spoil will typically be placed a minimum of 10 feet from the bank of the waterbody for temporary storage. Sediment barriers will be installed where necessary to reduce the amount of sediment from excavated spoil entering the waterbody.

DRAFT

For wider waterbodies, trench spoil may be placed within the waterbody for temporary storage. Spoil will be stored away from the thalweg of the channel. In the case of winter installations, trench spoil may be temporarily stockpiled on the ice surface of the crossing.

Short sections of the trench, known as hard plugs, will remain unexcavated in the adjacent upland section of the pipeline trench on both banks of the waterbody until after installation of the crossing section. This will separate the waterbody trench from the upland trench to prevent water from being diverted into the upland portions of the right-of-way, and to keep any muddy water that might have accumulated in the upland trench from flowing into the waterbody.

Once the trench has been excavated, the prefabricated crossing section will be installed in the trench. Pipe sections installed in the bed of a wet waterbody will be coated with concrete or fitted with bolt-on or set-on concrete weights to provide negative buoyancy. The trench will then be backfilled with the trench spoil and the original bed contours reestablished. After the trench is backfilled, the banks will be replaced to their original or a stable configuration. Any trench spoil not required for backfill will be spread across the width of the construction right-of-way in an upland area and stabilized during reclamation.

Construction will be limited to during the approved in-water environmental work windows when crossing streams using this method.

Refer to Appendix 1E for typical drawings depicting typical open-cut water-crossing construction.

Dry Crossing Methods

Flume Crossing Method

The flume crossing method consists of isolating and temporarily diverting the flow of water across the trench area through one or more steel flume pipes placed in the waterbody. This method allows trenching activities to occur within an area of the stream or riverbed that temporarily has no flow (that is, beneath the flume pipes), thereby minimizing the introduction of sediment and turbidity into the waterbody downstream of the crossing location. The flume method will typically be used to cross small to intermediate flowing waterbodies that support fishery habitat of value.

A sufficient number of adequately sized flume pipes will be installed in the waterbody to accommodate the highest anticipated flow during the scheduled crossing installation period. The flume pipes will be inspected to ensure that they are free of dirt, grease, oil, or other potential pollutants. After placing the pipes in the watercourse, sand or pea gravel-filled bags, water bladders, or metal wing deflectors will be placed in the watercourse around the flume pipes upstream and downstream of the proposed trench area. These devices will serve to dam the stream and divert the water flow through the flume pipes, thereby effectively isolating the water flow from the construction work area between the dam structures.

After fish have been salvaged and relocated from the construction work area, standing water between the dams may be completely pumped out or the water level may be lowered sufficiently to maintain a negative head between the excavation and the waterbody. Leakage from the dams or subsurface flow from below the bed of the waterbody may require additional pumping periodically. Pumped water will be discharged into energy dissipation/sediment filtration devices such as a geotextile filter bag or straw bale structure, into well-vegetated areas away from the water's edge, into snow filled areas, or into settling ponds to prevent silt-laden water from entering the watercourse.

DRAFT

Tracked excavators located on a bank of the waterbody will excavate a trench under the flume pipe across the dewatered streambed. Spoil excavated from the watercourse trench will be placed and stored a minimum of 10 feet from the edge of the watercourse. Once the trench is excavated, a prefabricated segment of pipe will be installed beneath the flume pipes. The trench will then be backfilled with native spoil from the watercourse bed. The banks will be stabilized before removing the dams and flume pipes and returning flow to the watercourse channel.

Refer to Appendix 1E for typical drawings depicting typical isolate-open-cut dam-and-flume construction.

Dam and Pump Crossing Method

The dam and pump method will be similar to the flume method, except that water pumps and hoses will be used instead of flume pipes to transport the stream flow around the construction work area. Similar to the flume method, the first step in the dam and pump crossing method will be to isolate the crossing area and to salvage and relocate fish from the construction area with nets or another suitable method.

Next, one or more pumps and hoses of sufficient size will be installed to transport anticipated flows around the construction work area. Additional backup pumps will be on site at all times in case of an operating pump failure. Pump intakes above the upstream dam will be appropriately screened to prevent entrainment of aquatic species. Energy-dissipation devices will be used to prevent scouring of the stream bed at the discharge location. Once the pumps are operational and pumping continuously, the watercourse upstream and downstream of the construction area will be dammed with sandbags and/or steel plates.

Following the installation of the dams, the pumps will run continuously until pipeline installation across the watercourse is complete. Water flow will be maintained through all but a short reach of the watercourse at the actual crossing location.

Tracked excavators located on a bank of the waterbody will excavate a trench under the flume pipe across the dewatered streambed. Spoil excavated from the watercourse trench will be placed and stored a minimum of 10 feet from the edge of the watercourse. Trench plugs will be maintained between the upland trench and the watercourse crossing. The pipe crossing section will be installed in the isolated area between the dams. After backfilling, the banks will be stabilized and the dams and pumps will be removed.

This method will be preferred for waterbodies where hard bedrock is encountered and in-stream blasting is required.

Refer to Appendix 1E for typical drawings depicting typical isolate-open-cut dam-and-pump watercourse construction.

Channel Diversion Crossing Method

The pipeline crossing of certain streams, in particular wide braided streams, might be installed using a channel diversion method. A diversion structure will be installed to divert the surface water flow to another channel away from the area where the first section of pipe will be installed. The first section of pipeline trench will then be excavated, and the excavated trench spoil will be stored beside the trench. The first pipe section will then be installed in the trench, and that section backfilled.

DRAFT

When the first half of the crossing section is installed, the surface water flow will be diverted back over the installed portion of the crossing. The second half of the crossing section will then be installed. The two segments of the crossing section will then be tied together within a dewatering bell hole. After the tie-in is completed, the diversion dam structures will then be removed.

With the completion of all in-stream work, the stream banks will then be reclaimed including the placement, as required, of scour and erosion protection.

Refer to Appendix 1E for typical drawings depicting typical isolate-open-cut dam-and-divert watercourse construction.

Horizontal Directional Drill Crossing Method

The horizontal directional drill (HDD) crossing method allows the crossing section to be installed in a trenchless manner. This method involves drilling under the waterbody and installing a prefabricated crossing section through the borehole, thereby avoiding disturbance to the ground surface at the approaches to the crossing and to the watercourse bed itself.

The following waterbodies have been preliminarily identified as ones to be crossed using the HDD method. The use of an HDD crossing method is subject to suitable subsurface conditions being present at the crossing location, as well as the size, weight, and structural characteristics of the pipe. This will be confirmed by site-specific geotechnical investigation prior to construction.

TABLE 1.6.3-1

Alaska Pipeline Project
Preliminary List of Horizontal Directional Drill Crossing Locations

Name or Unnamed Crossing	Alaska Mainline Milepost
South Fork Koyukuk River	[TBD]
Jim River	[TBD]
Yukon River	[TBD]
Chatanika River	[TBD]
Chena River	[TBD]
Salcha River	[TBD]
Tanana River #1	[TBD]
Tanana River #2	[TBD]

The initial steps involved in the use of a HDD are to prepare the drill pad and exit pad sites and to set up the drill rig and associated equipment. Pad set-up includes excavating temporary pits near the entry and exit points to capture and temporarily store drill mud and soil cuttings, and also includes installation of a buried anchor on the rig side. Pumps and fuel tanks will be set up at this time and will be required to withdraw water from the approved water crossing to create the fluid needed for drilling process.

A small-diameter pilot hole will be drilled from the entry side to the opposite side of the crossing, the exit side. The drilling fluid will be a water-based drilling mud, which is a slurry mixture of water and an environmentally benign material such as bentonite, a naturally occurring clay mineral. The drilling mud will be pumped into the drill hole throughout the drilling process. The pressure of the drilling mud will transmit hydraulic power to turn the drill bit, stabilize the drill hole, transport cuttings to the surface, and lubricate the drill bit. The mud and cuttings will be

DRAFT

stored temporarily and then pumped from the temporary storage pits to an on-site recycling unit where the drilling mud will be processed for reuse.

As the pilot hole drilling activity will progress, segments of drill rod will be inserted into the pilot hole to extend the length of the drill. The drill bit will be monitored and steered throughout the process to maintain the design path of the pilot hole. To enlarge the pilot hole, a larger reaming tool will be attached to the end of the drill on the exit side of the hole. The reamer will then be drawn back through the pilot hole to the drill rig (entry side). Drill rod sections will be added to the rear of the reamer as it progresses toward the rig, thereby allowing a string of drill rod to remain in the hole at all times. Several passes of consecutively larger reaming tools will be required before the hole will be of sufficient size to accept the carrier pipe. The final hole diameter will be no less than 12 inches larger than the carrier pipe diameter, (44 inches in diameter for the 32-inch-diameter PTGP, and 60 inches in diameter for a 48-inch-diameter carrier pipe.)

The crossing section pipe string, also referred to as the "pull section," will be fabricated on the right-of-way or temporary extra workspace on the exit side of the crossing while the drill hole is being advanced and reamed to size. The pipe string will be thoroughly inspected and hydrostatically tested prior to installation. A steel pull-head will be welded onto the front end of the pull section to pull the crossing section through the drilled and reamed hole. After the hole is completed, the crossing section will be attached to the drill string on the exit side of the hole and pulled back through the drill hole toward the drill rig.

As the crossing section is being pulled in, excess drilling mud will be collected, reused, incorporated into the soil in an upland area, or disposed of at an approved off-site disposal location. If water is left over from the drilling activity, it will be discharged into a well vegetated upland area or into an energy dissipation/sediment filtration device, such as a geotextile filter bag or straw bale dewatering structure near the crossing site.

Unconsolidated gravel, coarse sand, and fractured bedrock all present geologic circumstances that might result in a drilling mud release. These weak areas present drilling mud escape pathways that might be oriented either laterally or vertically. If drilling mud moves laterally, the release may not be evident on the surface. For a release to be evident there must be a preferential pathway extending vertically from the drill hole to the surface of the ground or the bed of the watercourse. The volume of a potential mud release will be dependent on a number of factors, including the size of the pathway, the permeability of the geologic material, the viscosity of the drilling mud, and the operating pressure of the hydraulic drilling system. Any mud release will be addressed in the spill response plan developed for the site.

Releases to the ground generally occur above and near the drill path near to the entry and exit pads. In the event drilling mud will be released on land, including within a wetland, a small pit with perimeter containment measures will be excavated at the release site to contain the drill fluid, and a pump will be used to transfer the drilling mud captured in the pit to a containment vessel.

In the event of a release to a waterbody, APP will attempt to plug the flow path by adding thickening agents to the drilling mud.

In most cases, an HDD can still be completed in spite of a drilling mud release; however, in some situations, the HDD might fail entirely, and the watercourse may not be able to be crossed using this method. The presence of outwash, interspersed with boulders and cobbles, fractured bedrock, or non-cohesive coarse sands and gravels, increase the likelihood drilling might fail

DRAFT

due to refusal of the drill bit, collapse of the borehole in non-cohesive, unstable substrate, or failure to control the alignment of the pilot hole drill path along the design path. In cases where drilling fails, waterbody construction will be completed using one of the alternative crossing methods described in this section.

Refer to Appendix 1E for typical drawings depicting typical HDD watercourse construction.

A description of the HDD method construction considerations and criteria for determining the appropriateness of a location will be included in Section 2.X of Resource Report 2. An HDD Contingency and Inadvertent Release Plan describing the prevention, detection, monitoring, notification, and corrective action procedures in the event of an inadvertent release of drilling fluid when the HDD method is used, will be developed for the project prior to construction.

Bore Crossing Method

The horizontal bore method is another trenchless method. This method will be the same as described in the section 1.6.3.3.

Aerial-Span Crossing Method

An aerial-span crossing will generally be considered when a geologic, topographic, fisheries or hydrologic condition or other conditions make the use of other crossing methods impractical, or where an existing crossing structure is present. Aerial span crossings are often used to cross narrow, deep, steep ravines or canyons.

Aerial-span crossing methods involve suspending an above-ground pipeline in the air above the geographic feature to be crossed. The pipeline could be attached to an existing structure, such as a bridge; could be attached to a new, specially built structure, such as a suspension or fixed-span bridge; or could simply span the waterbody without an additional supporting structure.

One or more types of aerial-span crossing methods are currently under consideration for APP:

- A single-span vehicle bridge with no bridge supports in the waterbody. Supports for the vehicle bridge will be located on each bank at either end of the bridge. The pipeline could be supported on the bridge or by a steel-girder or steel-plate structure under or on the side of the bridge.
- A multi-span vehicle bridge with bridge supports on each bank and one or more supports within the waterbody. The pipeline could be supported on the bridge or by a steel-girder or steel-plate structure under or on the side of the bridge.
- A steel-girder or steel-plate support bridge with or without one or more bridge supports, or footings, in the waterbody, depending upon the need.
- A cable suspension bridge with or without an in-stream support, depending upon the width of the crossing.

With the aerial-span crossing method, soil disturbance will typically be limited to areas bordering the waterbody. In general, narrow waterbodies will not be disturbed because the bridge supports will be located above the high-water mark.

[Note: Proposed aerial crossing locations will be identified in the Draft Report, after field programs to acquire data relevant to the design, and construction methods for each waterbody crossing have been completed.]

Refer to Appendix 1E for typical drawings depicting typical aerial-span crossings.

DRAFT

1.6.3.3 Road and Highway Crossings

Construction across paved roads and highways, and critical unpaved roads will be in accordance with project-specific specifications, and the requirements of road crossing permits and approvals. Most major paved roads and highways, and critical unpaved roads will be crossed by conventional horizontal boring techniques.

Boring requires the excavation of a pit on each side of the feature to be crossed, the placement of boring equipment in one of the pits, then boring a hole under the road at least equal in diameter to that of the carrier pipe. Once the hole is bored, a prefabricated pipe section will be pushed or pulled through the borehole. For long crossings, sections might be welded onto the pipe string just before being pushed or pulled through the borehole. There will be little or no disruption to traffic at road or highway crossings that are bored.

Such boring techniques might also be used to avoid potentially sensitive archaeological sites if approved by the applicable regulatory agencies.

Due to site-specific conditions, some paved roads, smaller unpaved roads, and driveways will likely be crossed using the open-cut method, where permitted by local authorities or private owners.

The open-cut method used in these instances will require temporary closure of the road to traffic, and establishment of detours. If no reasonable detour is feasible, at least one lane of the road being crossed will be kept open to traffic except during brief periods when it is essential to close the road to install the crossing section. Most open-cut road crossings will be completed within a few days and the road resurfaced (if required).

The road will be reclaimed using the same type of sub-bed and surface material as the original construction, or as specified by applicable crossing permits. Measures will be taken such as posting signs at open-cut road crossings to ensure safety and reduce traffic disruptions. The project will work with representatives of the state, applicable boroughs, municipalities, and other authorities having jurisdiction over road, highway, and utilities to be crossed by the pipeline, to obtain crossing permits and develop traffic management plans that might be necessary to ensure safe and timely installation of the crossings and related reclamation work. Table 1.6.3-2 lists the major road crossing locations, land ownership, and proposed crossing methods that will be used during construction of APP. [Note: Information for road crossings is being evaluated and will be further defined in the Draft Report.]

TABLE 1.6.3-2

Alaska Pipeline Project
Major Road Crossings

[Note: Table data is pending and will be further defined in the Draft Report.]

Segment/Road Name	Approximate Milepost [a]	Land Ownership	Crossing Method
POINT THOMSON GAS TRANSMISSION PIPELINE			
ALASKA MAINLINE			

[a] PMP = Point Thomson Gas Transmission Pipeline milepost, AMP = Alaska Mainline milepost

Refer to Appendix 1E for typical drawing depicting typical road and highway crossing construction. Section 11.X of Resource Report 11 will address safety measures that will be implemented by the project during the installation of road crossings.

DRAFT

1.6.3.4 Trans Alaska Pipeline System, Utility and Other Pipeline Crossings

Buried and overhead pipelines and utilities will be crossed during construction of APP. Prior to the start of right-of-way grading and access construction activities, all overhead crossings will be identified and a warning system referred to as "goal posts" will be installed on each side of the overhead utility crossing. This system is typically made up of two small-diameter non-conductive posts installed in the ground on each side of the right-of-way. A rope is installed between the vertical posts at a safe height. The goal posts will be installed to ensure equipment that is crossing under the overhead utility is low enough to safely pass under the utility without a line strike.

For crossings of above-ground sections of TAPS, height warning or low clearance bars will be installed on both sides of the crossing if such bars are not already in place.

Buried utility crossings include communication, electrical, pipeline (water, sewer, or hydrocarbon transmission pipelines), or other types of buried utilities. Before ground is broken, the initial task will be to determine that all buried crossings on the right-of-way have been identified. Alaska Digline, "established to enable the public, contractors, utilities and other excavators to notify underground facility owners of planned digging activities [within Alaska] with just one call" will be notified well in advance of planned excavation activities. Alaska Digline can be reached within Alaska by dialing 811; from elsewhere, by dialing the toll-free number 800-478-3121; or by visiting their web site at www.akonecall.com. Using its database, Alaska Digline will forward to affected subscribers a standardized information package describing how to surface stake buried facilities. These buried crossings will then be identified visually with the use of a hydro-vacuum system that removes the soil cover from the buried utility without the use of mechanical excavation equipment. This activity is often referred to as "daylighting." The depth and exact location will then be marked in advance of construction work that will follow at each location so daylighted. APP will work closely with the Alaska State Pipeline Coordinator's Office to develop site-specific drawings for crossing the TAPS pipeline.

Table 1.6.3-3 summarizes the utility crossings associated with APP. Refer to Appendix 1E for typical drawing depicting existing pipeline and typical utility line crossings. [Note: Information for utility crossings is being evaluated and will be further defined in the Draft Report.]

TABLE 1.6.3-3

Alaska Pipeline Project
TransAlaska Pipeline System, Utility, and Other Pipeline Crossings

Segment/Utility	Approximate Milepost [a]	Land Ownership
POINT THOMSON GAS TRANSMISSION PIPELINE		
Endicott Pipeline	[TBD]	[TBD]
Unknown Pipeline	[TBD]	[TBD]
Unknown Pipeline	[TBD]	[TBD]
Unknown Pipeline	[TBD]	[TBD]
Unknown Pipeline	[TBD]	[TBD]
Unknown Pipeline	[TBD]	[TBD]
Northstar Gas Pipeline	[TBD]	[TBD]
ALASKA MAINLINE		
Northstar Gas	[TBD]	[TBD]
Northstar Oil	[TBD]	[TBD]
Unknown Pipeline	[TBD]	[TBD]
Alyeska Fuel Gas	[TBD]	[TBD]

DRAFT

TABLE 1.6.3-3

Alaska Pipeline Project
TransAlaska Pipeline System, Utility, and Other Pipeline Crossings

Segment/Utility	Approximate Milepost [a]	Land Ownership
TAPS [b]	[TBD]	[TBD]

[a] PMP = Point Thomson Gas Transmission Pipeline milepost, AMP = Alaska Mainline milepost
[b] TransAlaska Pipeline System = TAPS

1.6.3.5 Proximity to Highways, Major Roads, TAPS, and Other Pipelines and Parallel Utilities

Tables 1.3.1-2 and 1.3.1-3 summarize the proximity of the proposed APP routes to highways, major roads, TAPS, other pipelines and other parallel utilities within Alaska. Appendix 1C contains additional information regarding these locations.

1.6.3.6 Longitudinal and Cross Slopes

Areas of steep terrain often require special construction techniques for pipeline installation. Such techniques might include constructing a shoo-fly access around the slope for use by pipeline equipment and rubber-tired traffic. The shoo-fly will possibly reduce the construction right-of-way for these slope areas in some locations.

Grading might be required in areas where the proposed pipeline alignment crosses steep slopes. Steep slopes often need to be graded to a shallower slope angle to accommodate pipe-bending limitations and to provide for safe operation of construction equipment and support vehicles. In such areas, the slopes will be graded. Longitudinal slopes are those along the right-of-way, while cross slopes are perpendicular to the right-of-way. Refer to Appendix 1E for typical drawings depicting typical steep-longitudinal-slope construction.

In areas where the pipeline route crosses laterally along the side of a slope, a built-up work pad is required to create a safe, relatively flat terrace.

Mitigation measures and techniques will be applied according to APP's Plan (Appendix 1I).

Different construction methods are required to address thaw-stable and thaw sensitive soils while preparing the right-of-way work pad. Table 1.6.3-4 lists the range of cross slopes and associated construction methods to build a flat right-of-way.

TABLE 1.6.3-4

Alaska Pipeline Project
Right-of-Way Cross Slopes and Planned Construction Methods

Cross Slope Range	Typical Terrain	Construction Leveling Method
Thaw-stable soils		
0% to 2%	Flat	Light grading, snow-ice, or both
2% to 20% or more	Rolling foothills to mountainous	Cut and fill in-situ soils, drill and blast, or both
Thaw sensitive soils		
0% to 2%	Flat	Level tundra with snow and ice, light grading loose surface material, or both
2% to 10%	Rolling foothills	Build up right-of-way low areas with snow, ice, granular import, or some combination of snow, ice, or granular import

DRAFT

TABLE 1.6.3-4

Alaska Pipeline Project
Right-of-Way Cross Slopes and Planned Construction Methods

Cross Slope Range	Typical Terrain	Construction Leveling Method
10% to 20% or more	Mountainous	Cut and fill in-situ material with import material, drill and blast, or both

More specific right-of-way preparation and corresponding construction methods will be identified in Appendix 1H.

In steep terrain, temporary sediment barriers such as silt fencing and straw bales typically will be installed during clearing activities to prevent the movement of disturbed soil sedimentation off the right-of-way. Temporary slope breakers consisting of mounded and compacted soil typically will be installed across the right-of-way as part of the grading activities. Permanent slope breakers will be installed during cleanup.

To reduce the volume of cut and fill material while constructing a flat work surface on cross slopes, measures may be taken to reduce the width of either the spoil area or the travel area, or both, as listed in Table 1.6.3-5.

TABLE 1.6.3-5

Alaska Pipeline Project
Construction Right-of-Way Width-Reduction Measures for Cross Slopes

	Spoil Area		Travel Area	
Cross Slope Range	Remove Trenching Equipment Bypass Travel Lane	Portion of Trench Spoil Leveled on Work Area	Reduce Width	Safety Buffer
0% to 2%	No	No	No	No
2% to 10%	No	No	No	Yes
10% to 20%	Yes	No	Yes	Yes
>20%	Yes	Yes	Yes	Yes

It should be noted that pipeline construction efficiency is reduced on side slopes when the width of the right-of-way is reduced. The width of the right-of-way physically limits the amount of equipment and number of people that can work safely in a common area. Because the right-of-way is congested due to the reduced width, the construction workforce responsible for stringing, bending, welding, trenching, and lowering-in the pipe will have to function at slower production compared to the typical construction crews and their expected efficiency.

The safety buffer will increase the width of the travel area, but is required for safe travel along the construction right-of-way. The width of the safety buffer from the edge of the fill slope will depend on the properties of the fill material and angle of the cross slope.

Following pipe installation activities, reclamation will be completed in accordance with project-specific reclamation and re-vegetation specifications.

1.6.3.7 Geologic Faults

Pipelines crossing potentially active fault zones must be able to deform longitudinally and in flexure to accommodate potential ground surface displacements at active faults without failing or resulting in a rupture or natural gas leak. The Alaska Mainline will traverse areas of seismic

DRAFT

activity and major potentially active fault crossings will be encountered along the pipeline, as listed in Table 1.3.1-4. The PTGP will not cross any major potentially active fault areas.

APP's proposed pipeline operating temperature in Alaska will generally result in frozen soils surrounding the pipeline, which in turn will increase the soil restraint on the pipeline. This could promote a guillotine-like fault displacement effect on the pipeline, potentially causing a deformed condition. To avoid this, APP will install the pipeline at major potentially active faults with an above-ground configuration similar to the existing TAPS design at the Denali Fault. A sliding support design concept will be used for fault crossings with sufficient sliding capacity to accommodate fault rupture. Grade beams laid on the ground surface will serve as sleeper supports. The above-ground crossing concept will be similar for all major fault crossings, but the crossing layout dimensions and orientation will vary depending on the type of fault slip, width of the fault zone, and the amount of estimated displacement. Similarly, sleeper beam and pipe shoe dimensions will also vary.

Refer to Appendix 1E for typical drawings detailing typical major fault-crossing layouts.

1.6.3.8 Agricultural Land

APP's Plan provides an agricultural construction management and recovery procedures and Section 8.X of Resource Report 8 will identify locations that are actively used for agricultural purposes. APP's Plan addresses relevant aspects of pipeline construction and rehabilitation as they relate to cultivated lands (for example, topsoil segregation, depth of cover, compaction limits, rock removal, irrigation/drain structures, weed and pest control, and easement restrictions). The APP Plan also identifies a dispute resolution process to address potential issues associated with any alleged lack of success of soil rehabilitation, the acceptable level of crop production on the construction area, repairs to agricultural-related features, or any other items addressed by the plan.

As part of the land acquisition process, negotiations with affected landowners will be undertaken to obtain easement agreements for the pipeline right-of-way across actively cultivated areas. Compensation for financial impacts associated with crop damage or potential harvest productivity losses caused by construction activities will be addressed during those easement negotiations.

1.6.3.9 Residential, Commercial, and Industrial Areas

[Note: APP is still evaluating whether any residences will be located within 50 feet of construction work areas. Additional information to be provided in the Draft Report. A final list of the residences within 50 feet of the construction work areas by milepost, approximate distance from the construction work area, and approximate distance and direction from the proposed pipeline centerline will be provided with Resource Report 8 with the final application.]

In residential areas, construction activities will be completed in a manner that will reduce disturbance to the residents. While working in such areas, APP will maintain access to the residences for the duration of construction activities. When construction activities involve crossing of roadways necessary for access to private residences and no alternative entrance exists, APP will implement special accommodation measures, such as the installation of temporary bridging over the open portion of the trench, to maintain passage for landowners and emergency vehicles.

APP will either narrow down the construction right-of-way or adopt a centerline alignment adjustment to avoid occupied structures. APP will erect temporary safety fences on both limits

of the right-of-way that will extend along the construction right-of-way for a minimum distance of 100 feet beyond any nearby residence. Homeowners will be notified in advance of any anticipated utility disruption, including expected outage durations.

During summer construction, topsoil may be segregated from subsoil during construction in residential areas where possible, unless specifically requested not to do so by a landowner, or the project elects to import topsoil during its cleanup and rehabilitation activities. Following construction, debris will be removed, and residential areas will be reclaimed to near preconstruction conditions. APP will coordinate with residential landowners to attempt to meet any special requests concerning cleanup and reclamation.

APP will develop construction mitigation plans for residences within 50 feet of the construction work area. These plans will identify the mitigation measures that will be implemented to promote safe and efficient pipeline installation with reduced impacts on nearby developments. Refer to Appendix 1E for typical drawings depicting typical footprint needs under restricted conditions.

1.6.3.10 Pipeline Construction in Permafrost

In some cases, special construction approaches may need to be implemented in permafrost terrain. These approaches will be primarily applied where thaw sensitive permafrost is present. Where thaw stable permafrost is present conventional pipeline construction methods will generally be applied.

A geotechnical verification program (GVP) will be conducted the year or season before pipeline constructionat predetermined locations along the right-of-way where additional subsurface soils data is desired. This program will involve mobilizing drilling rigs to advance boreholes at regular intervals along the right-of-way. It will be intended to help identify the start and end of a variety of geotechnical features such as permafrost and high ice content soils so that appropriate construction mitigation methods could be specified.

In most cases the GVP will be conducted during winter conditions to expedite the movement of equipment along the right of way. Where right of way clearing is required the GVP will be performed during clearing. In tundra conditions the GVP will be performed the winter season before pipeline construction to allow time to verify the drilling results and prescribe applicable design/construction mitigation measures. In tundra conditions, construction of winter access roads may be required to provide access for the GVP drilling equipment

Specific concerns/issues related to pipeline construction in permafrost terrain will need to be addressed, as follows:

Slopes

In some cases right of way clearing on slopes will be deferred until just before pipeline construction in order to protect the thermal regime of the soils. In these cases, an access route (shoo-fly) around the uncleared slopes will be required. Additionally, the root structure will generally be left in place to reduce disturbance of surface organics for thermal protection. In some cases, a narrowed right of way will be considered as part of the mitigation strategies. Mitigation to control the rate of permafrost thaw or in site specific cases potential preservation of the permafrost will be designed and applied at the time of construction.

DRAFT

Grading

Preparation of the right of way normally involves cutting and filling to build a level work surface in order to proceed with pipeline construction. In the presence of thaw sensitive soils on slopes, the general rule of thumb will be to reduce cuts and to apply fill in order to provide a uniform work surface. In some cases, a level granular pad or winter pad (snow/ice) will be installed on the right of way.

Trenching

Excavation of the pipe trench in permafrost will be much like trenching in seasonally frozen soils with either trenchers or excavators. However, in some cases, depending on soil conditions, drilling and blasting will be required before trenching with excavators. Immediately following drilling and blasting, excavation will take place in order to prevent soils from re-bonding.

Backfilling

In locations of high ice content soils, excavated trench typically will require supplemental imported backfill to offset volume loss due to thawing in subsequent summer seasons. This backfill will be low ice content, thaw stable materials sourced from nearby borrow sites.

1.6.3.11 Blasting

Drilling and blasting operations will be required at some locations where mechanical rock excavation methods cannot be effectively employed to remove bedrock and permafrost during grading and trenching operations. Section 6.X of Resource Report 6 will identify the areas along the proposed pipeline route by milepost where grade and trench rock is anticipated.

APP will provide adequate notice to adjacent landowners or tenants in advance of blasting.

Blasting activities will be performed in accordance with manufacturers' prescribed safety procedures, industry practices, and comply with applicable regulations and permits. In addition, APP will identify its proposed blasting procedures, including safety, use, storage, and transportation of explosives.

1.6.3.12 Contaminated Soils

Contaminated soil encountered during construction will be dealt with in accordance with the appropriate federal and state regulations. A phase 1 survey to assess for any existing contamination will be conducted at any previously disturbed or brownfield sites that may be used during construction. If such a site is then used, appropriate measures will be implemented at that site prior to its use by APP.

1.6.4 ABOVEGROUND FACILITY CONSTRUCTION PROCEDURES

1.6.4.1 Gas Treatment Plant

The GTP will be constructed in accordance with APP's construction standards and applicable regulatory requirements, and will follow industry-accepted practices and procedures.

Required construction support facilities at the GTP will include a construction camp sized for up to 850 workers. During early construction, all site or field personnel will be housed at available hotels and contractor owned facilities in Deadhorse. Staff will commute daily to the GTP work locations via contractor provided bus service and typical construction crew cab trucks. The following summarizes the general chain of events that will occur during GTP site construction.

DRAFT

- Ice road installation to the Put-23 mine, construction of the GTP gravel pad, piling, and roads, as well as main haul road modifications.
- DH-2 modification.
- Channel dredging and first-year maintenance dredging/screeding.
- Installation and start-up of the main construction camp.
- Installation of underground electrical lines.
- Installation of temporary facilities (including construction fabrication buildings) and temporary power, water supply, and waste disposal to support these facilities.
- Installation of piles and modules from first sealift, followed by hook-up, commissioning, and start-up.
- Installation of piles and modules from second sealift, followed by hook-up, commissioning, and start-up.
- Installation of piles and modules from third sealift, followed by hook-up, commissioning, and start-up.

1.6.4.2 Compressor Stations

The compressor stations will be constructed in accordance with APP's construction standards and will follow industry-accepted practices and procedures.

After the site has been prepared, piles will be installed to support buildings, equipment, and structures. Compressor buildings will be constructed on site by erecting steel frame structures followed by the installation of the roofing and walls. Prefabricated utility building skids will be installed along with major vessels and equipment. Piping will generally be welded, except where it is connected to flanged components. Welders and welding procedures will be qualified in accordance with API Standards or the American Society of Mechanical Engineers Boiler and Pressure Vessel code. Welds in natural gas piping systems will be examined using a qualified radiographic examination procedure. Piping segments will be prefabricated and transported to each site. Station piping will be installed above grade with the exception of some piping runs that will be installed below grade to allow vehicular access to equipment and buildings. Electrical and instrument cabling will then be installed. Natural gas piping systems will be checked and hydrostatically tested. Finally, the compressor station will be tested and commissioned prior to operation.

Construction activities and storage of construction materials and equipment will be confined within the compressor station sites. Water for the station will be trucked in or sourced from an on-site well. Waste water and other station wastes will be stored on site and trucked to an approved disposal site. Small amounts of waste will be incinerated on site. Debris and wastes generated from construction will be disposed of at an approved disposal site.

1.6.4.3 Custody Transfer Meter Stations

Many of the procedures used in meter station construction will be similar to those used in compressor station construction described above.

Meter station facilities will be constructed on gravel pads developed as part of the GTP and the PTU sites. Following the installation of piles, building skids will be installed along with the

DRAFT

scrubber, meter runs, and above-ground piping. Piping will generally be welded, except where it is connected to flanged components. Piping segments will be prefabricated and transported to the site. Electrical and instrument cabling will then be installed. Finally, high-pressure natural gas piping systems will be checked and hydrostatically tested, and the meter station will be fully tested and commissioned prior to operation.

1.6.4.4 Mainline Block Valves and Launchers and Receivers

Launcher and receivers will be constructed concurrently with compressor stations and meter stations using similar construction methods.

MLBV and compressor station side valve assemblies will be prefabricated and tested prior to installation, and will generally be installed concurrently with the construction of the pipeline. Upon completion, the site will be fenced. Gravel may be applied at sites if necessary.

1.6.5 INFRASTRUCTURE CONSTRUCTION

1.6.5.1 Gravel Pads

Gravel pads related to infrastructure construction will be placed at compressor stations, temporary camps, contractor yards, and stockpile sites. The proposed sites for each of these facilities are generally level. Before construction begins, the limits of the construction area, including the area for the actual pad, will be surveyed and staked, and an access road will be constructed from an existing road or highway to the site if necessary (as described in Section 1.6.5.3).

At sites underlain by thaw sensitive permafrost, trees and bushes within the construction area will be either cut and mulched or burned. Stumps and root balls will be left in place. If leveling is required, low areas will be filled with granular material or other thaw stable material and high areas will be graded to establish a level area. The pad will be constructed by placing and compacting granular material directly over the surface organic layer to the specified thickness. A layer of rigid insulation may be placed under the pad to reduce the amount of gravel required. A geotextile may be placed to provide additional support and separation of the overlying fill and the native materials.

At sites underlain by unfrozen or thaw stable soils, stumps will be removed and trees, bushes, and removed stumps will be mulched or burned. Surface organic topsoil will be stripped and stored on site. If leveling is required, filling and grading will be conducted to establish a level area. If needed, the surface will be filled and graded to establish a level grade. A layer of granular material will be placed on the graded subsoil and compacted. Insulation will not be placed under the pad in these areas.

The fill required at these facilities will be obtained from borrow sites (see Sections 1.3.3.2 and 1.6.5.2).

Regular maintenance of the gravel pads will be conducted to provide a year-round trafficable surface and to control water or seasonal runoff.

Constructing gravel pads will require water for compacting granular material, for other construction activities, and for use by personnel. Water will also be required for some operational-related activities related to general maintenance of the pads. Section 2.X of Resource Report 2 will provide additional discussion of water use for constructing gravel pads, including the estimated volume of water by spread, and compressor site, for gravel pad construction.

DRAFT

1.6.5.2 Borrow Sites

Borrow sites will be surveyed and staked, any trees and brush will be cleared, an access road from the road or highway will be constructed, and a portion of the total footprint will be graded level for equipment use.

Once the borrow site has been prepared, the contractor will mobilize crushing and screening equipment, a mobile office, and fuel tanks. In some cases, a small camp to house personnel will be brought to the site.

Borrow material will be processed to meet the demands of its intended use.

1) General fill: An unsorted mix of granular material. General fill is typically used as non-specific fill or to build up an embankment on a severely uneven surface and is used as subgrade material for gravel pads.
2) Graded granular: A granular material that has been crushed and screened to a certain granular size. Graded granular is typically used for road surfacing, concrete aggregate, padding and bedding for the pipeline, or as a surface grade for gravel pads.

After being mined and processed, granular borrow typically will be stockpiled and transported to the construction site.

Where suitable material cannot be segregated from the trench spoil for bedding and padding the pipe, material will be imported from borrow sources.

1.6.5.3 Access Roads

To construct all season access roads, the contractor will survey and stake the limits of the area to be constructed, clear any trees from the area, grade the area (as necessary), and then place and compact granular material to create a trafficable surface.

At sites underlain by thaw sensitive permafrost, trees and bushes within the construction area will be cut and mulched or burned. Stumps and root balls will be left in place. If leveling is required, low areas will be filled with granular material or other thaw stable material and high areas will be graded to establish a level area. The access road will be constructed by placing and compacting granular material directly over the surface organic layer to the specified thickness. A geotextile may be placed to provide additional support and separation of the overlying fill and the native materials.

Regular maintenance will be needed to maintain a trafficable surface and to control water or seasonal runoff.

Constructing access roads will require water for compacting granular material, for other construction activities, and for use by personnel. Section 2.X of Resource Report 2 will provide additional discussion of water use for constructing access roads, including the estimated volume of water by spread for construction and operation of access roads.

1.6.6 CONSTRUCTION WORKFORCE

The anticipated workforce associated with the APP will include:

- Pipeline: For the current pipeline construction plan, a peak pipeline workforce of 5,000 to 7,000 will be required during construction of APP, with individual pipeline spreads reaching up to 1,600 people.

DRAFT

- Compressor Stations and Meter Stations: For the current pipeline construction plan, it is anticipated that each compressor station will be constructed in about 350 days and require about 150 personnel to construct, inspect, and pre-commission the facility. It is anticipated that a meter station will be constructed in about 100 days. Each meter station will require about 100 personnel to construct, inspect, and pre-commission the facility.
- GTP: For the current construction plan, construction of the GTP, including GTP infrastructure and dock modifications, will require up to 850 workers.

[Note: Other infrastructure (e.g., borrow sites) workforce information will be provided in the Draft Report.]

Section 5.X of Resource Report 5 will provide additional discussion about the project's workforce.

1.7 ENVIRONMENTAL COMPLIANCE, TRAINING, AND INSPECTION

1.7.1 ENVIRONMENTAL COMPLIANCE

APP will incorporate the environmental requirements and project-specific environmental mitigation plans into specifications and construction drawings issued with construction bid documents for the project. During pre-bid meetings, APP will notify prospective contractors of the environmental requirements that will apply to the project. Where environmental permits are received after bidding, APP will work with affected contractors to comply with the new requirements. During construction, if a contractor does not comply with environmental requirements, as soon as APP becomes aware of the issue, APP will direct the contractor to comply and, if necessary, issue a stop work order for that crew until the non-compliance is corrected and, where warranted, take other appropriate actions.

1.7.2 ENVIRONMENTAL TRAINING

Prior to initiating construction of the facilities, APP will conduct environmental training for company and contractor supervisory personnel. The training program will focus on APP's environmental requirements, project-specific permit conditions, and project-specific mitigation plans. In addition, APP will provide training sessions before each crew commences construction with periodic follow-up training for groups of newly assigned personnel to be provided by APP's environmental inspectors (EIs).

1.7.3 ENVIRONMENTAL INSPECTION

APP will assign at least one EI per construction spread to monitor environmental compliance. APP's EIs will be responsible for monitoring compliance with the requirements of permits, clearances, and other approvals of an environmental nature that are issued for the project; evaluating the construction contractor's implementation of the environmental mitigation measures required by the FERC Certificate, and other permits; issuing stop-activity orders and corrective actions to maintain environmental compliance; documenting compliance with environmental requirements; and preparing required status reports for submittal to the FERC's environmental staff. APP's EIs will also act as a liaison between APP and field representatives of environmental regulatory agencies (e.g., FERC) that visit the project during construction.

DRAFT

1.8 OPERATION AND MAINTENANCE PROCEDURES

The pipelines and pipeline-related aboveground facilities will be operated and maintained to meet the requirements of DOT Transportation of Natural and Other Gas By Pipeline: Minimum Federal Safety Standards (49 CFR Part 192) and other applicable federal and state requirements.

1.8.1 PIPELINE AND ABOVEGROUND FACILITY OPERATIONS

1.8.1.1 Pipelines, Meter Stations, and Compressor Stations

The pipeline system, including meter stations and compressor stations, will be remotely monitored and operated around the clock from a central control center located within existing facilities (e.g., TransCanada's Gas Control Center in Calgary, Alberta). Appropriate redundancies and back-up facilities will be provided to ensure operational reliability. The central control center will monitor meter stations and monitor and control compressor stations via a supervisory control and data acquisition system and telecommunications infrastructure. Compressors will be started up and shut down remotely from this location. Compressors could also be shut down locally if needed.

Meter stations will be equipped with gas detection and alarm systems. Compressor stations will be equipped with gas, fire, smoke, and heat detection and alarm systems. Emergency shutdown systems will be designed to be initiated remotely or locally if an unsafe condition was detected. Overpressure relief valves and pressure monitoring and control systems will prevent over-pressuring of gas piping and equipment.

Line break control systems will be installed on MLBVs. These include pressure sensing devices that will automatically close a valve if the pipeline gas pressure drops below a pre-established value.

A regional operations and maintenance office located in Fairbanks will maintain the pipeline and aboveground facilities.

1.8.1.2 Gas Treatment Plant

The GTP will be monitored and controlled from a control center located on the GTP site. Gas detection and alarm systems will be installed throughout the facility and emergency depressuring and/or shutdown systems will be designed to be initiated automatically or remotely. In addition, an equipment health monitoring systems will be installed to collect and trend data, monitor critical rotating equipment, and manage data so that it can be accessed both locally and remotely to enable troubleshooting, optimization, and predictive maintenance planning.

1.8.1.3 Emergency Response

Emergency preparedness and response plans will be developed to address and mitigate occurrences involving public or personnel safety or environmental protection. These will be based on sponsoring company emergency preparedness and response plans. Emergency response equipment will be located at the GTP, the operations and maintenance office in Fairbanks and possibly at other locations along the Alaska Mainline. APP will establish and maintain communication with local industry and government fire and emergency response officials regarding its response plans.

DRAFT

1.8.2 RIGHT-OF-WAY MONITORING AND MAINTENANCE

1.8.2.1 Integrated Public Awareness Program

APP will develop an integrated public awareness program to educate and inform excavators, contractors, emergency services, public officials, and land owners about pipeline safety. Information will be communicated through newspaper ads, open houses, meetings, and project specific mailings to targeted audiences.

1.8.2.2 Pipeline Patrol and Leak Detection

Aerial and ground patrols will be performed periodically to survey the right-of-way for evidence of gas leaks, unauthorized encroachments, soil disturbances, or other conditions that might affect the integrity or operation of the pipeline. Any land development in the vicinity of the right-of-way will also be monitored.

The pipeline will be clearly marked at property lines and at crossings of roads and other key points. Markers identifying APP as the operator will indicate the presence of the pipeline and provide a contact number and address in the event of an emergency, or before any excavation in the area by a third party should occur. APP will participate in Alaska's One-Call systems (Digline).

1.8.2.3 Right-of-Way Maintenance

Vegetation along the pipeline right-of-way will be periodically cleared in order to maintain visibility during pipeline patrols and to facilitate access during maintenance. Large brush and trees will be cut or trimmed back. The frequency of vegetation maintenance will depend upon the vegetation growth rate. Normally, vegetation maintenance will not be undertaken in agricultural or rangeland pasture areas**.** [Note: Specific details of APP's Procedures, including maintenance practices, cleared rights-of-way widths, and timing of maintenance activities to be updated in the Draft Report.]

Pipeline integrity surveys and vegetation maintenance may identify areas on the right-of-way where erosion control devices require repair, or additional erosion control devices are required. In these cases the right-of-way will be repaired and erosion control devices will be fixed or new ones installed to prevent degradation of the right-of-way.

1.8.3 PIPELINE INTEGRITY MANAGEMENT

1.8.3.1 Pipeline Integrity Management Program

APP will develop a pipeline integrity management program for use in the operating phase to ensure public and staff safety, reduce environmental impacts, and protect the installed pipelines and facilities. The program will be based on the project sponsoring companies' pipeline integrity management systems. It will include information on:

- data management, including a geographic information system;
- condition monitoring;
- risk assessment and engineering assessment; and
- mitigation methods.

DRAFT

Data Management

As-built records from construction will be stored in the project data management system and transferred to operations at start-up. Data will include:

- material properties;
- as-built records;
- weld non-destructive examination records;
- geotechnical data;
- monitoring data, including pipe geometry and environmental data; and
- equipment data books.

Condition Monitoring

The pipeline integrity monitoring program will include:

- identifying potential pipeline hazards;
- monitoring current operating conditions and system performance;
- providing access for monitoring probes in facilities; and
- conducting a pipeline corrosion survey.

After construction is completed, a baseline survey will be conducted. The frequency of subsequent surveys will be determined, based on performance. Changes in the pipeline centerline coordinates in relation to the baseline survey will serve as inputs to analysis, to identify locations of potential strain concern.

In-line inspection (ILI) tools that use inertial-guidance technologies will be used to monitor pipeline movements. These tools are inserted into the pipeline through launchers located at meter stations or compressor stations and they are propelled along the pipeline at a controlled speed by gas pressure. They accurately record their position and, therefore, that of the pipe.

ILI tools will also be used to determine if areas of the pipeline have experienced metal loss. The CPS performance will be evaluated regularly.

Risk Assessment and Engineering Assessment

The results of the pipeline integrity monitoring program will be used in a risk assessment to:

- consider a trend analysis of the pipeline operating condition;
- assess probabilities of failure from potential hazards identified in the condition monitoring; and
- assess the potential consequences of a failure.

The results of the risk assessment will be used to develop site-specific mitigation plans.

In some cases, an engineering assessment will be required. An engineering assessment involves developing and using engineering models for specific hazards for sections of the pipeline system. These models will be used as an aid in developing specific mitigation plans and determining the timing of potential interventions related to the design.

DRAFT

Mitigation

Mitigation that may be required during operations will be developed and applied on a site- and issue-specific basis as needed.

1.8.4 ABOVEGROUND FACILITY MAINTENANCE

1.8.4.1 Meter Stations, Compressor Stations, and Mainline Block Valves

Planned maintenance activities at meter stations and compressor stations will include routine checks, calibration of equipment and instrumentation, inspection of critical components, and servicing and overhauls of equipment. Unplanned maintenance activities will include investigation of problems identified by the gas control centre and station monitoring systems, and implementation of corrective actions.

Vegetation outside the fenced area in the fire buffer zone will be controlled by cutting and removing large trees and brush.

MLBVs will be inspected annually or biennially and the results documented within the project maintenance management system.

1.8.4.2 Gas Treatment Plant

APP will develop a Maintenance and Reliability program to address responsibilities, staffing and organization, and schedules. Planned maintenance shutdowns (turnarounds) will be scheduled and coordinated to meet the maintenance required for major equipment. Safety equipment will be included in the design of the GTP in accordance with API, National Fire Protection Association, and company standards in order to facilitate the safe operation and maintenance of the GTP. Safety equipment will include fire and gas detection systems, fire water system, pressure relief valves, blow-down valves, and emergency shutdown systems.

1.8.5 OPERATIONS WORKFORCE

APP anticipates that operation and maintenance of the pipelines, meter stations, and compressor stations will require approximately 35-50 full time people in Alaska, comprising trades technicians, technical specialists, safety personnel, support staff, and management. Additional engineering, maintenance, and management support will be provided by the project sponsoring companies. Current information indicates the number of qualified local people may not be sufficient to fill operating and maintenance manpower requirements, and recruitment programs will be required in advance of project start-up. APP will recruit local people in 2015 to start training in preparation for Operations in 2020. The field trainees will be trained at existing project sponsoring companies' sites for the first two years and then will support commissioning and start-up of the APP as required. The balance of experienced technicians required will be seconded from project sponsoring companies' operations teams and phased out over 5-10 years during Operations.

APP will initially staff GTP operations with a core team of experienced employees from the project sponsoring companies, coupled with trained new hires and experienced local hires. It is intended that the local hires will progressively displace the non-local employees over time as they achieve the required competency levels and gain sufficient experience. On-site operations staff will include approximately 200 employees. Another 200 employees will be on off rotation, and about 100 employees will comprise off-site support.

DRAFT

1.9 NON-JURISDICTIONAL FACILITIES

When considering whether to issue a certificate under the NGA for the construction of proposed natural gas facilities, the FERC must consider a broad array of factors relating to the public convenience and necessity. Proposed projects often include associated facilities that fall outside the FERC's NGA jurisdiction. Such non-jurisdictional facilities may include facilities that are integral to the proposed project as well as minor, non-integral components.

Non-jurisdictional facilities associated with proposed projects may nevertheless require the FERC's review in the certificate proceeding as part of its National Environmental Policy Act (NEPA) obligations. To that end, the FERC has adopted criteria to determine whether its NEPA review should include an analysis of such non-jurisdictional project facilities. Those criteria include:

- Whether the regulated activity comprises "merely a link" in a corridor-type project (e.g., a transportation or utility transmission project);
- Whether there are aspects of the non-jurisdictional facility in the immediate vicinity of the regulated activity which uniquely determine the location and configuration of the regulated activity;
- The extent to which the entire project will be within the FERC's jurisdiction; and
- The extent of cumulative federal control of, and responsibility for, the project.

[Note: Additional information regarding non-jurisdictional facilities, if any are identified, will be included in the Draft Report.]

1.10 FUTURE PLANS AND ABANDONMENT

APP currently has no foreseeable expansion or abandonment plans for the proposed pipeline system; however, the system could be modified to accommodate additional throughput capacity by adding gas treating facilities to the GTP and/or adding compressor stations along the Alaska Mainline. Market forces (e.g., natural gas supply and demand) are the main factors that will determine the need for expansion or abandonment of the proposed facilities. If future expansion or abandonment were necessary, APP will be required to seek appropriate regulatory approvals at that time, including any authorizations that might be required from the FERC, Bureau of Land Management, or other agencies. If the pipeline is abandoned, the pipe may be left in place or may be removed from the area and reclaimed in accordance with provisions and requirements of the FERC Certificate authorizing abandonment, and any other land managing agency requirements.

1.11 PERMITS AND APPROVALS

Table 1.11-1 lists the major federal, state, and local authorizations that may be required to complete the APP, along with the status of applications for such authorizations. Appendix 1K includes key agency correspondence conducted to date**.** [Note: TBD in the Draft Report.]

DRAFT

TABLE 1.11-1

Alaska Pipeline Project
Major Authorizations
[The applicability of these authorizations will be determined in the Draft Report.]

Agency Authorization	Status of Permit or Approval
FEDERAL	
U.S. Federal Energy Regulatory Commission	
• Certificate of Public Convenience and Necessity – Section 7 of Natural Gas Act	
Bureau of Indian Affairs	
• Federal Right-of-Way Grant	
• Temporary Use Permit and Land Use Authorization	
• Alaska National Interest Lands Conservation Act (ANILCA) Section 810 Evaluation	
Bureau of Land Management	
• Right-of-Way Grant and Temporary Use Permit	
• ANILCA Section 810 Evaluation	
• Mineral Material Sales Contracts	
Federal Aviation Administration	
• Objects Affecting Navigable Airspace	
Federal Communications Commission	
• Radio Transmission License	
National Marine Fisheries Service	
• Endangered Species Consultation - Endangered Species Act	
• Essential Fish Habitat Review and Consultation	
• Marine Mammal Protection Act/Incidental Harassment Authorization	
U.S. Army Corps of Engineers	
• Section 404 – Clean Water Act	
• Section 10 - River and Harbors Act	
• Ocean Dumping Site Management Plan – Marine Protection, Research, and Sanctuaries Act (MPRSA) Section 103	
U.S. Coast Guard	
• Bridge Permit	
U.S. Department of Defense	
• U.S. Air Force Right-of-Way Access	
• U.S. Army Right-of-Way Access	
• Civil Works License/Right-of-Way Access	
U.S. Department of Energy	
• Presidential Permit	
U.S. Environmental Protection Agency	
• Ocean Dumping Site Designation Consultation – MPRSA Section 103	
• Ocean Dumping Site Management Plan Consultation – MPRSA Section 103	
• Underground Injection Control Program	
• Hazardous Waste Management Facility Permit	
U.S. Fish and Wildlife Service (Region 7 – Anchorage and Fairbanks Field Offices)	
• Endangered Species Consultation - Endangered Species Act	
• Bald and Golden Eagle Protection Act	
• Migratory Bird Treaty Act	
• Marine Mammal Protection Act/Incidental Harassment Authorization	
• ANILCA Section 810 Evaluation	

DRAFT

TABLE 1.11-1

Alaska Pipeline Project
Major Authorizations
[The applicability of these authorizations will be determined in the Draft Report.]

Agency Authorization	Status of Permit or Approval
STATE	
Alaska Department of Environmental Conservation (ADEC) – Division of Air Quality	
• Prevention of Significant Deterioration	
• Construction Permit for a Major Source of Hazardous Air Pollutant	
• Air Quality Construction Permit (Title I)	
• Air Quality Operating Permit (Title V)	
ADEC – Division of Environmental Health	
• Approval to Construct and Operate a Public Water Supply System	
ADEC – Division of Water Quality	
• Section 401 State Certification – Certificate of Reasonable Assurance	
• Section 402 Permit - Alaska Pollution Discharge Elimination System – Clean Water Act	
• Domestic and Non-Domestic Wastewater Disposal Permit	
Alaska Department of Fish and Game	
• Title 16 Fish Habitat Permit	
Alaska Department of Natural Resources (ADNR) – Division of Coastal and Ocean Management	
• Alaska Coastal Management Program Consistency Review	
ADNR – Division of Mining, Land, and Water	
• Surface Water Rights Permit	
• Temporary Water Use Permit	
• Certificate of Water Appropriation	
• Material Sales Permit	
Alaska State Historic Preservation Office	
• National Historic Preservation Act – Section 106 Review	
• Archaeological Resources Protection Act Permit	
LOCAL	
North Slope Borough Permitting and Zoning Division	
• Land Management and General Development Permits	

1.12 AGENCY, PUBLIC, AND OTHER STAKEHOLDER COMMUNICATIONS

Since project inception, APP has engaged in a comprehensive public outreach program with stakeholders to discuss the proposed project and seek input regarding construction methods and issues of concern. As part of this plan, APP has met with landowners; elected officials (federal, state, borough, and municipal); Alaska Native Claims Settlement Act regional and village corporations; tribes; community leaders; agricultural, business, and civic groups; and the general public. These meetings have enabled APP to engage in an ongoing dialogue with stakeholder groups, enabling stakeholders to receive project information and provide input into project plans for design, construction, and operation of the proposed pipeline, as well as into mitigation plans associated with the proposed project. The names and addresses of affected landowners are provided in Appendix 1L, which are filed under separate cover as privileged and confidential information. [Note: Landowner list is being developed and will be provided prior to the beginning of scoping.]

DRAFT

APP is in the process of contacting affected private landowners to obtain their permission for cultural and environmental surveys of their properties. Additionally, APP has established a toll-free phone number for landowners and other stakeholders to call to obtain further information about the project, and is working directly with landowners regarding specific pipeline routing activities impacting their land.

In addition to in-person outreach meetings with landowners and interested stakeholders, APP is planning on participating in a number of other communication opportunities for stakeholders to learn more about the proposed project and provide input, including: open houses, FERC meetings, interagency meetings, communication materials (e.g., brochures, fact sheets, project web site), and communications portals (e.g., email and voicemail).

APP believes that public engagement provides the opportunity for valuable input throughout project development. To that end, APP is committed to communicating with landowners and area stakeholders, and will continue to refine the pipeline route as well as project-specific mitigation plans in response to input received from the general public, agencies (including the FERC), and other stakeholders. As specified in Title 18 CFR Section 157.6, a notice will be published in local newspapers once the FERC issues a Notice of Application. Additionally, copies of APP's final Resource Reports will be placed in public libraries within the region.

A summary of key environmental issues identified through APP consultation with stakeholders and the location where those issues are addressed in the resource reports are provided in Table 1.12-1.

TABLE 1.12-1

Alaska Pipeline Project
Environmental Issues Identified During Stakeholder Outreach and Scoping

Issue/Concern	Environmental Report Section(s) Addressing Issue/Concern
Dredging • Impacts on fisheries and marine mammals	Resource Report 2
Ship-related Impacts • Ballast water • Marine mammal impacts • Emissions	Resource Reports 2, 3, and 9
Waterbody Crossings • Crossing methods and bridges • Impacts on essential fish habitat • Impacts on current waterbody uses	Resource Reports 2 and 8
Construction and Mitigation Procedures • Project-specific measures to reduce impacts and reclaim areas disturbed by construction	Resource Reports 2 and 7
Wetlands • Crossing procedures and reclamation	Resource Report 2
Wildlife • Big game migration impacts • Impacts on subsistence resources • Impacts on Bald and Golden eagles • Impacts on Endangered Species Act species	Resource Report 3 and 5
Vegetation • Duration of recovery • Steep slope revegetation	Resource Report 3

DRAFT

TABLE 1.12-1

Alaska Pipeline Project
Environmental Issues Identified During Stakeholder Outreach and Scoping

Issue/Concern	Environmental Report Section(s) Addressing Issue/Concern
Cultural Resources • Historic structures and site impacts	Resource Report 4
Socioeconomics • Impacts due to sudden population increase/decline • Impacts on hospitals, fire, law enforcement, schools, transportation, and infrastructure • Impacts on human health	Resource Report 5
Subsistence • Health Impact Analysis and Environmental Justice • Influx of workers increasing pressure on subsistence resources south of Brooks Range • Impacts on subsistence wildlife • Timing of project	Resource Report 5
Seismic Activity and Geohazards • Pipeline design in seismically active areas • Construction in geohazard areas	Resource Report 6
Permafrost and Tundra • Plans for construction, stabilization, and reclamation in thaw-stable and thaw-sensitive soils	Resource Report 7
Land Use and Designations • Proposed wilderness designations • Contaminated and potentially contaminated sites • Private land crossings • Coastal Zone Management Act consistency	Resource Report 8
Climate Change • Compatibility with emerging regulations \	Resource Report 9
Direct and Indirect Air Emissions • General Conformity Applicability Analysis • Non-attainment areas	Resource Report 9
Safety • Emergency planning/emergency response • Design standards	Resource Report 11

1.12.1 PUBLIC OPEN HOUSES AND COMMUNITY OUTREACH MEETINGS

Table 1.12.1-1 provides a summary of the open house and community outreach meetings that were held in 2010 along the pipeline corridors. The public open house meetings involved small group discussions followed by a formal presentation, and then a question and answer session. The community outreach meetings also involved a formal presentation followed by a question and answer session. APP will continue conducting follow-up meetings in the spring of 2011 to provide updated project information and to address issues and concerns raised in the initial meetings.

DRAFT

TABLE 1.12.1-1

Alaska Pipeline Project
Summary of Public Open Houses and Stakeholder Meetings

Community/Location	Date
North Slope Communities	
Anaktuvuk Pass	2010
Barrow	2010
Kaktovik	2010
Nuiqsut	2010
Interior Communities	
Bettles	2010
Coldfoot	2010
Delta Junction	2010
Dot Lake	2010
Evansville	2010
Fairbanks	2010
Healy Lake	2010
Livengood	2010
Minto	2010
Nenana	2010
North Pole	2010
Northway	2010
Rampart	2010
Stevens Village	2010
Tanacross	2010
Tetlin	2010
Tok	2010
Wiseman	2010
Copper Basin Communities	
Chistochina	2010
Copper Center	2010
Gakona	2010
Glenallen	2010
Gulkana	2010
Mentasta Lake	2010
Paxon	2010
Tazlina	2010
Tonsina	2010
Coastal/Port Communities	
Haines	2010
Seward	2010
Skagway	2010
Valdez	2010

DRAFT

1.12.2 AGENCY MEETINGS

APP began consultation meetings in late 2008 with federal, state, and local agencies. These meetings were conducted to inform the various agencies about the proposed pipeline, and to help them assist in identifying and resolving potential issues for the project.

Table 1.12.2-1 provides a summary of interagency meetings conducted through March 15, 2011.

TABLE 1.12.2-1

Alaska Pipeline Project
Summary of Agency Meetings Through March 15, 2011

Date	Participating Agencies	General Topic(s) Covered
December 16, 2008	Alaska Department of Natural Resources (ADNR) – Office of History and Archaeology	Geotechnical investigations
December 17, 2008	Alaska State Pipeline Coordinator's Office (ASPCO), Bureau of Land Management (BLM)	Project introduction, permitting, geotechnical investigations
January 6, 2009	U.S. Army Corps of Engineers (COE), U.S. Department of Energy, Department of Homeland Security: Pipeline Security Division, Department of the Interior, Department of Transportation – Pipeline and Hazardous Material Safety Agency (PHMSA), Advisory Council on Historic Preservation, U.S. Environmental Protection Agency (EPA), Federal Coordinator for Alaska Natural Gas Transportation Projects, U.S. Federal Energy Regulatory Commission (FERC)	Project kick-off meeting
January 14, 2009	BLM, U.S. Fish and Wildlife Service (FWS), National Marine Fisheries Service (NMFS), EPA, Department of Transportation –PHMSA, ADNR, Alaska Department of Game and Fish (ADFG), Alaska Department of Transportation and Public Facilities (ADOTPF), Alaska Department of Environmental Conservation (ADEC)	Project kick-off meeting
January 15, 2009	BLM, FWS, ADFG, ADNR, ADOTPF, Office of Federal Coordinator (OFC)	Project kick-off meeting
January 28, 2009	North Slope Borough (NSB) – Planning Commission	Project kick-off meeting
January 29, 2009	NSB – Planning Commission, Inupiat Community of the Arctic Slope	Project kick-off meeting
February 9, 2009	Tok, Alaska community	Geotechnical program
February 24, 2009	Nuiqsut, Alaska community	Geotechnical program
March 16, 2009	BLM	Project update, facility siting and routing, existing geotechnical data
March 16, 2009	OFC, Alaska Gasline Inducement Act (AGIA) Coordinator's Office, ASPCO	Project update, BLM and ADNR permitting, carbon dioxide at gas treatment plant, endangered species, greenhouse gas and climate change
March 17, 2009	ADEC – Air	Project update, facility siting, carbon dioxide, meteorological data, air quality and modeling, permitting
March 18, 2009	ADFG, FWS	Project update, facility siting and routing, safety at faults, aerial crossings, Tetlin National Wildlife Refuge (NWR), field surveys and timing, permitting process, waterbody crossings

DRAFT

TABLE 1.12.2-1

Alaska Pipeline Project
Summary of Agency Meetings Through March 15, 2011

Date	Participating Agencies	General Topic(s) Covered
March 18, 2009	ADNR, ADEC, ADNR – Forestry	Project update, field surveys and timing, access, project facilities including camps and abovegrounds, permitting process, treatment of timber on state lands
March 19, 2009	State Historic Preservation Office (SHPO)	Project update, cultural resource surveys, existing data from TransAlaska Pipeline System
March 19, 2009	EPA, COE, ADEC – Water	Project update, wetland construction, impacts on permafrost, steep slope construction, facilities siting and pipeline routing, greenhouse gases and climate change
March 19, 2009	FWS	Project update, land requirements, construction seasons, right-of-way maintenance, Tetlin NWR, polar bear critical habitat, secondary impacts from facilities
June 1, 2009	AGIA Coordinator's Office/ASPCO	Project status, agency roles, and service agreements
June 2, 2009	BLM	Project status, agency roles, and service agreements
July 15, 2009	Alaska Department of Public Safety (ADPS), Deputy Fire Marshall	Project introduction, specific aspects of gas treatment plant structures
July 15, 2009	OFC	Project update
August 7, 2009	ADPS, Deputy Fire Marshall	General project discussion and specific aspects of gas treatment plant structures
August 11, 2009	OFC	Project update
September 21, 2009	OFC	Draft Implementation Plan, permit guidance tools
September 24, 2009	ADOTPF	Road upgrades for Dalton and Richardson Highways
September 29, 2009	BLM	Introductory meeting for Anchorage-based project staff
October 5, 2009	BLM	Completion reports for 2009 geotechnical surveys
October 6, 2009	ASPCO	Introductory meeting for Anchorage-based project staff
October 7, 2009	COE	Introductory meeting for Anchorage-based project staff
December 7, 2009	OFC	APP interactions with OFC
December 17, 2009	OFC	APP interactions with OFC
January 11, 2010	OFC	Project status update to interagency meeting
January 14, 2010	ADOTPF	Alaska Pipeline Project (APP) use of Alaska infrastructure
February 24, 2010	Alaska Department of Labor	Gas Pipeline Training Steering Committee
March 22, 2010	BLM	Right-of-way application submittal process
April 2, 2010	ASPCO	Right-of-way application submittal process
April 14, 2010	ADPS, Division of Fire and Life Safety	Gas treatment plant design
May 6, 2010	ADFG	Proposed field sampling protocols
May 7, 2010	COE, FERC, OFC	Proposed field sampling protocols
May 11, 2010	AGIA Coordinator's Office	Status update
May 15, 2010	ADFG	North Slope water sources and fisheries
May 17, 2010	NSB	NSB Science Permit application
May 20, 2010	OFC	Status update
May 24, 2010	ADFG	Proposed field sampling protocols
May 26, 2010	ADEC	Request for air quality datasets
May 26, 2010	ADNR – Office of History and Archaeology, BLM	Field sampling protocols

DRAFT

TABLE 1.12.2-1

Alaska Pipeline Project
Summary of Agency Meetings Through March 15, 2011

Date	Participating Agencies	General Topic(s) Covered
May 27, 2010	BLM	Request for Casual Use Notification and Concurrence
June 9, 2010	BLM	Field sampling program
June 9, 2010	COE	Field sampling program
June 14, 2010	ASPCO	Land use permitting
June 15, 2010	BLM	Land use permitting
June 25, 2010	OFC	Status update
July 6, 2010	OFC	Status update to Interagency Meeting
July 6, 2010	OFC, FERC	APP interactions with FERC and OFC, and field studies
August 9, 2010	ADFG	Pipeline construction approaches
August 10, 2010	ADFG	Pipeline construction approaches
August 12, 2010	PHMSA	APP interactions with PHMSA and information delivery plan
September 10, 2010	AGIA Coordinator's Office	Project regulatory process
September 15, 2010	OFC	Project regulatory process
September 27, 2010	FERC, OFC, AGIA Coordinator's Office	2010 Field Programs and project regulatory process
September 30, 2010	State of Alaska Department of Health and Social Services	State of Alaska Heath Impact Assessment Program
October 7, 2010	ADFG	Existing and planned subsistence field studies
October 14, 2010	FERC, OFC, AGIA Coordinator's Office	FERC application filing requirements
October 19-20, 2010	PHMSA and other federal and State of Alaska agencies	Multi-agency PHMSA Workshop on pipeline safety requirements, routing, integrity, and information needs
October 21, 2010	PHMSA, OFC	PHMSA regulatory filing requirements and information delivery planning
November 4, 2010	BLM	Project plans for 2011 field studies
November 9, 2010	PHMSA	PHMSA regulatory filing requirements dealing with materials engineering
November 22, 2010	ADOTPF	Project update, pipeline routing relative to highway corridors
December 3, 2010	ADFG	Reviewed 2010 fish studies and discussed potential 2011 studies
December 13, 2010	PHMSA	PHMSA regulatory filing requirements dealing with pipeline engineering
December 14, 2010	Alaska Coastal Management Program, ADF&G, Alaska Division of Homeland Security and Emergency Services (ADHS&EM), AGIA Coordinator's Office, BIA, BLM, ADEC, ADNR – Division of Geological and Geophysical Survey (DGGS), ADNR, Department of Defense (DOD), AK DOT/PF, EPA, FERC, USFS, FWS, NMFS, NPS, OFC, PHMSA, Regulatory Commission of Alaska (RCA), SHPO, COE, USCG, USGS	Review project description, facilities siting, and pipeline routing
December 17, 2010	ADFG	Subsistence data gathering
January 21, 2011	ADNR – Office of History and Archaeology	Update on 2010 field data collection program
February 1, 2011	FERC	Upcoming community meetings
February 1, 2011	FWS, OFC	Project update, permitting requirements

DRAFT

TABLE 1.12.2-1

Alaska Pipeline Project
Summary of Agency Meetings Through March 15, 2011

Date	Participating Agencies	General Topic(s) Covered
February 1, 2011	NMFS, OFC	Project update, permitting requirements
February 3, 2011	COE, OFC	Project update, permitting requirements
February 7, 2011	ASPCO	Project update, permitting requirements
February 11, 2011	COE	Wetland mapping
February 15, 2011	PHMSA, OFC	Pipeline management systems
February 16, 2011	FERC	Project update
February 16, 2011	BLM, ASPCO	Right-of-way permit application
February 25, 2011	BLM, FWS	Access for field surveys and studies
March 1, 2011	COE, EPA, OFC	Dredging and disposal permitting
March 1, 2011	ADEC, ADHS&EM, ADF&G, ADNR, AGIA Coordinator's Office, AK DOT/PF, ASPCO, BLM, COE, DGGS, DOD-U.S. Air Force (USAF), DOD-USAF-Eielson, EPA, FERC (including third-party representatives), FWS, NMFS, OFC, PHMSA, RCA, SHPO, Transportation Security Administration, USGS	Pipeline construction workshop
March 2, 2011	ADEC, ADF&G, ADNR, AGIA Coordinator's Office, ASPCO, BLM, COE, DGGS, EPA, FERC (including third-party representatives), FWS, NMFS, OFC	Right-of-way preparation and maintenance workshop
March 3, 2011	ADEC, ADF&G, ADNR, AGIA Coordinator's Office, ASPCO, BLM, COE, EPA, FERC (including third-party representatives), FWS, NMFS, OFC	Water course crossing workshop

1.13 REFERENCES

[Note: To be provided in the Draft Report.]

DRAFT

APPENDIX 1B: ABOVEGROUND FACILITY LOCATION MAPS AND TYPICAL PLOT PLANS

[Note: Maps and plot plans to be provided in the Draft Report.]

DRAFT

APPENDIX 1C HIGHWAY AND PIPELINE PROXIMITY TABLES

This appendix contains Tables 1C-1 and 1C-2, which list the proximity of the proposed Alaska Mainline route and the proposed Point Thomson Gas Transmission Pipeline route, respectively, to highways, major roads, TAPS, other pipelines and parallel utilities.

DRAFT

TABLE 1C-1

Alaska Pipeline Project
Highway and Pipeline Proximity Table for the Alaska Mainline

Milepost Start	Milepost End	Length (miles)	Borough or Census Area	Parallel Utility or Road	Offset Distance to Utility or Road (feet)	Direction from Pipeline
[TBD]	[TBD]	[TBD]	North Slope Borough	Northstar Gas	[TBD]	[TBD]
[TBD]	[TBD]	[TBD]	North Slope Borough	Northstar Oil	[TBD]	[TBD]
[TBD]	[TBD]	[TBD]	North Slope Borough	Unknown pipeline	[TBD]	[TBD]
[TBD]	[TBD]	[TBD]	North Slope Borough	Alyeska fuel	[TBD]	[TBD]
[TBD]	[TBD]	[TBD]	North Slope Borough	TransAlaska Pipeline System (TAPS)	[TBD]	[TBD]
[TBD]	[TBD]	[TBD]	North Slope Borough	Dalton Highway	[TBD]	[TBD]
[TBD]	[TBD]	[TBD]	Yukon-Koyukuk census area	TAPS	[TBD]	[TBD]
[TBD]	[TBD]	[TBD]	Yukon-Koyukuk census area	Wiseman Road	[TBD]	[TBD]
[TBD]	[TBD]	[TBD]	Yukon-Koyukuk census area	Elliott Highway	[TBD]	[TBD]
[TBD]	[TBD]	[TBD]	Fairbanks North Star Borough	TAPS	[TBD]	[TBD]
[TBD]	[TBD]	[TBD]	Fairbanks North Star Borough	Elliott Highway	[TBD]	[TBD]
[TBD]	[TBD]	[TBD]	Fairbanks North Star Borough	Steese Expressway/Highway	[TBD]	[TBD]
[TBD]	[TBD]	[TBD]	Fairbanks North Star Borough	Gilmore Trail	[TBD]	[TBD]
[TBD]	[TBD]	[TBD]	Fairbanks North Star Borough	Chena Hot Springs Road	[TBD]	[TBD]
[TBD]	[TBD]	[TBD]	Fairbanks North Star Borough	Johnson Road	[TBD]	[TBD]
[TBD]	[TBD]	[TBD]	Tanana Tetlin census area	TAPS	[TBD]	[TBD]
[TBD]	[TBD]	[TBD]	Tanana Tetlin census area	Quartz Lake Road	[TBD]	[TBD]
[TBD]	[TBD]	[TBD]	Tanana Tetlin census area	Tanana Loop Road	[TBD]	[TBD]
[TBD]	[TBD]	[TBD]	Tanana Tetlin census area	Rika's Road	[TBD]	[TBD]
[TBD]	[TBD]	[TBD]	Tanana Tetlin census area	Tanana Loop Extension	[TBD]	[TBD]
[TBD]	[TBD]	[TBD]	Tanana Tetlin census area	Jack Warren Road	[TBD]	[TBD]
[TBD]	[TBD]	[TBD]	Tanana Tetlin census area	Nistler Road	[TBD]	[TBD]
[TBD]	[TBD]	[TBD]	Tanana Tetlin census area	Clearwater Road	[TBD]	[TBD]
[TBD]	[TBD]	[TBD]	Tanana Tetlin census area	Spruce Road/AG 1410	[TBD]	[TBD]
[TBD]	[TBD]	[TBD]	Tanana Tetlin census area	Sawmill Road/1403	[TBD]	[TBD]
[TBD]	[TBD]	[TBD]	Tanana Tetlin census area	Alaska Highway	[TBD]	[TBD]
[TBD]	[TBD]	[TBD]	Tanana Tetlin census area	Isaac Avenue	[TBD]	[TBD]
[TBD]	[TBD]	[TBD]	Tanana Tetlin census area	Tanacross Road Old	[TBD]	[TBD]
[TBD]	[TBD]	[TBD]	Tanana Tetlin census area	Tanacross Road Wye	[TBD]	[TBD]
[TBD]	[TBD]	[TBD]	Tanana Tetlin census area	Taylor Highway	[TBD]	[TBD]
[TBD]	[TBD]	[TBD]	Tanana Tetlin census area	Unknown pipeline	[TBD]	[TBD]
	Total	[TBD]				

DRAFT

TABLE 1C-2

Alaska Pipeline Project
Highway and Pipeline Proximity Table for the Point Thomson Gas Transmission Pipeline

Milepost		Length (miles)	Borough or Census Area	Parallel Utility or Road	Offset Distance to Utility or Road (feet)	Direction from Pipeline
Start	End					
[TBD]	[TBD]	[TBD]	North Slope Borough	Badami pipeline	[TBD]	[TBD]
[TBD]	[TBD]	[TBD]	North Slope Borough	Endicott Pipeline	[TBD]	[TBD]
[TBD]	[TBD]	[TBD]	North Slope Borough	Unknown pipeline	[TBD]	[TBD]
[TBD]	[TBD]	[TBD]	North Slope Borough	Northstar Gas Pipeline	[TBD]	[TBD]
	Total	[TBD]				

DRAFT

APPENDIX 1D: TABLE OF ADDITIONAL TEMPORARY WORKSPACE BY MILEPOST

[Note: This table will be provided in the Draft Report.]

DRAFT

APPENDIX 1E: TYPICAL DRAWINGS

DRAFT

ALASKA PIPELINE PROJECT
APPENDIX 1E
TYPICAL DRAWINGS INDEX
PRELIMINARY DRAFT FERC APPLICATION

TYPICAL DRAWING NUMBER	REV.	DRAWING CATEGORY	DRAWING DESCRIPTION
TRENCH-01	C	TRENCH MODES	BURIED PIPE IN EXCAVATOR TRENCH
TRENCH-03	A	TRENCH MODES	BURIED PIPE IN ROCK TRENCH
ROW-01	B	RIGHT-OF-WAY MODES	NORTH SLOPE (WINTER)
ROW-02	E	RIGHT-OF-WAY MODES	WINTER
ROW-03	D	RIGHT-OF-WAY MODES	SUMMER
ROW-04	B	RIGHT-OF-WAY MODES	CROSS SLOPES - NORTH SLOPE (WINTER)
ROW-05	E	RIGHT-OF-WAY MODES	CROSS SLOPES (WINTER)
ROW-06	C	RIGHT-OF-WAY MODES	POINT THOMSON GAS TRANSMISSION PIPELINE (WINTER)
ROW-21	C	RIGHT-OF-WAY MODES	ADDITIONAL TEMPORARY WORKSPACE 1/2
ROW-22	C	RIGHT-OF-WAY MODES	ADDITIONAL TEMPORARY WORKSPACE 2/2
ROAD-01	E	ROAD CROSSINGS	ROAD CROSSINGS - ARTERIAL/COLLECTOR ROADS
ROAD-02	E	ROAD CROSSINGS	ROAD CROSSINGS - LOCAL ROADS
ROAD-03	C	ROAD CROSSINGS	TRAILS & DRIVEWAYS
FP-01	D	FOREIGN PIPELINE AND UTILITY CROSSINGS	FOREIGN PIPELINES
UT-01	C	FOREIGN PIPELINE AND UTILITY CROSSINGS	BURIED UTILITY
UT-02	C	FOREIGN PIPELINE AND UTILITY CROSSINGS	ABOVE GROUND UTILITY
WB-01	C	WATERBODY CROSSINGS	MAJOR/INTERMEDIATE - TRENCHED
WB-02	C	WATERBODY CROSSINGS	MAJOR/INTERMEDIATE - HDD
WB-03A	C	WATERBODY CROSSINGS	MAJOR/INTERMEDIATE - UNSUPPORTED PIPE BRIDGE
WB-03B	C	WATERBODY CROSSINGS	MAJOR/INTERMEDIATE - SIMPLY SUPPORTED SPAN BRIDGE
WB-03C	A	WATERBODY CROSSINGS	MAJOR/INTERMEDIATE - CABLE SUPPORTED SPAN
BC-01	C	BUOYANCY CONTROL	CONCRETE COATING
BC-02	C	BUOYANCY CONTROL	SADDLE BAGS
BC-03	C	BUOYANCY CONTROL	BOLT ON RIVER WEIGHTS
BC-04	C	BUOYANCY CONTROL	SCREW ANCHORS
BC-05	C	BUOYANCY CONTROL	CONCRETE SET ON WEIGHTS
CC-01	C	CORROSION CONTROL	COATINGS

ALASKA PIPELINE PROJECT
APPENDIX 1E
TYPICAL DRAWINGS INDEX
PRELIMINARY DRAFT FERC APPLICATION

TYPICAL DRAWING NUMBER	REV.	DRAWING CATEGORY	DRAWING DESCRIPTION
CC-02	C	CATHODIC PROTECTION	TYPICAL DEEP VERTICAL ANODE BED
CC-03	C	CATHODIC PROTECTION	TYPICAL HORIZONTAL ANODE BED
FC-01	C	FRACTURE CONTROL	TYPICAL FRACTURE CONTROL METHOD
ACC-01	C	TYPICAL ACCESS ROADS	TYPICAL PERMANENT ACCESS ROAD SECTION
ACC-03	C	TYPICAL ACCESS ROADS	TYPICAL TEMPORARY ICE/SNOW ACCESS ROAD SECTION
ACC-05	C	TYPICAL ACCESS ROADS	TYPICAL TEMPORARY SHOOFLY ROADS PLAN/SECTION
ACC-06	C	TYPICAL ACCESS ROADS	TYPICAL TEMPORARY GRANULAR ACCESS ROAD OFF HIGHWAY
FAC-05	C	PIPELINE FACILITIES	TYPICAL MAINLINE BLOCK VALVE PLOT PLAN
FAC-08A	C	PIPELINE FACILITIES	TYPICAL DELIVERY POINT TAKE-OFF PLOT PLAN
CONST-02	D	CONSTRUCTION TYPICALS	HORIZONTAL BORING/DRILLING ROADS
CONST-03	D	CONSTRUCTION TYPICALS	OPEN-CUT ROADS
CONST-04	E	CONSTRUCTION TYPICALS	WATERBODIES – MAJOR/INTERMEDIATE - OPEN-CUT
CONST-05	E	CONSTRUCTION TYPICALS	WATERBODIES – MINOR - OPEN-CUT
CONST-06	E	CONSTRUCTION TYPICALS	WATERBODIES - ISOLATED OPEN CUT - DAM AND PUMP
CONST-07	E	CONSTRUCTION TYPICALS	WATERBODIES - ISOLATED OPEN CUT - DAM AND FLUME
CONST-08	E	CONSTRUCTION TYPICALS	WATERBODIES - ISOLATED OPEN CUT - DAM AND DIVERT
CONST-09	C	CONSTRUCTION TYPICALS	WATERBODIES - HORIZONTAL DIRECTIONAL DRILL
CONST-10	E	CONSTRUCTION TYPICALS	WATERBODIES - HORIZONTAL BORE
CONST-11	C	CONSTRUCTION TYPICALS	EQUIPMENT CROSSING - FORD
CONST-12	C	CONSTRUCTION TYPICALS	EQUIPMENT CROSSING - MAT BRIDGE
CONST-13	C	CONSTRUCTION TYPICALS	EQUIPMENT CROSSING - MAT ROCK/CULVERT BRIDGE
CONST-14	C	CONSTRUCTION TYPICALS	EQUIPMENT CROSSING - ROCK/CULVERT BRIDGE
CONST-15	C	CONSTRUCTION TYPICALS	EQUIPMENT CROSSING - ICE BRIDGE
CONST-16	C	CONSTRUCTION TYPICALS	EQUIPMENT CROSSING - CLEAN SNOW FILL
CONST-17	C	CONSTRUCTION TYPICALS	EQUIPMENT CROSSING - LOG FILL
CONST-20	D	CONSTRUCTION TYPICALS	HELIPADS
CONST-22A	C	CONSTRUCTION TYPICALS	1500 PERSON CAMP - 20 ACRES

ALASKA PIPELINE PROJECT
APPENDIX 1E
TYPICAL DRAWINGS INDEX
PRELIMINARY DRAFT FERC APPLICATION

TYPICAL DRAWING NUMBER	REV.	DRAWING CATEGORY	DRAWING DESCRIPTION
CONST-22B	C	CONSTRUCTION TYPICALS	750 PERSON CAMP - 10 ACRES
CONST-22C	C	CONSTRUCTION TYPICALS	500 PERSON CAMP - 8 ACRES
CONST-22D	C	CONSTRUCTION TYPICALS	150 PERSON CAMP - 3 ACRES
CONST-22E	C	CONSTRUCTION TYPICALS	50 PERSON CAMP - 2 ACRES
CONST-23A	C	CONSTRUCTION TYPICALS	PIPE STORAGE/CAMP/ CONTRACTOR YARD - OPTION 1 - 50 ACRES
CONST-23B	C	CONSTRUCTION TYPICALS	PIPE STORAGE/CAMP/ CONTRACTOR YARD - OPTION 2 - 50 ACRES
CONST-23C	C	CONSTRUCTION TYPICALS	PIPE STORAGE/CAMP/ CONTRACTOR YARD - OPTION 3 - 50 ACRES
CONST-23D	B	CONSTRUCTION TYPICALS	STAND ALONE PIPE STORAGE YARD - 20 ACRES
CONST-24	C	CONSTRUCTION TYPICALS	STAND ALONE CONTRACTOR YARD - 8 ACRES
CONST-28	C	CONSTRUCTION TYPICALS	CONSTRUCTION ON STEEP LONGITUDINAL SLOPES
CONST-33	C	CONSTRUCTION TYPICALS	TYPICAL WATER DISCHARGE SITE
CONST-34	C	CONSTRUCTION TYPICALS	HYDROSTATIC TEST POINT
FAULT-01	C	FAULT CROSSINGS	CONCEPTUAL "ZEE" FAULT CROSSING DESIGN - STRIKE-SLIP FAULTS
FAULT-02	C	FAULT CROSSINGS	CONCEPTUAL "U" FAULT CROSSING DESIGN - STRIKE-SLIP FAULTS
FAULT-03	C	FAULT CROSSINGS	CONCEPTUAL "ZEE" FAULT CROSSING DESIGN - REVERSE OR THRUST FAULTS

GENERAL NOTES:

1. DRAWINGS ARE CONCEPTUAL IN NATURE BASED ON CURRENT AVAILABLE INFORMATION.
2. SITE SPECIFIC DRAWINGS WILL BE DEVELOPED FOR MANY OF THE TYPICAL SITUATIONS SHOWN.
3. DRAWINGS WILL BE UPDATED AS ENGINEERING PROGRESSES. ADDITIONAL DRAWINGS WILL BE GENERATED AND OBSOLETE DRAWINGS WILL BE DELETED.
4. TRENCH MODES AND RIGHT-OF-WAY MODES ARE HIGHLY DEPENDANT ON THE FINAL PIPELINE ROUTE AND CENTERLINE AND WILL BE UPDATED AS ROUTING PROGRESSES.

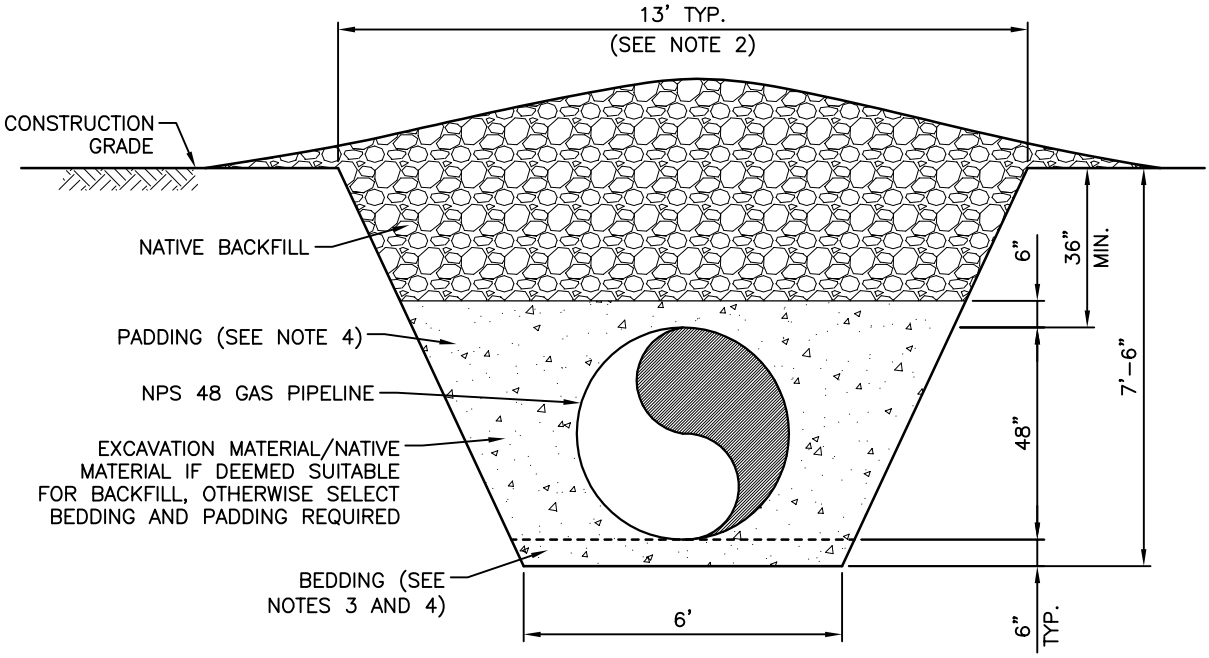

NOTES:

1. MINIMUM DEPTH OF COVER SHOWN FOR TYPICAL CLASS 1, 2 OR 3 LOCATIONS. ADDITIONAL DEPTH MAY BE REQUIRED FOR CROSSINGS, AREAS REQUIRING BUOYANCY CONTROL, AREAS WITH FROST HEAVE POTENTIONAL AND OTHER AREAS AS IDENTIFIED SUCH AS ROAD ENCROACHMENTS.
2. DITCH WALLS WILL BE AS VERTICAL AS SOIL CONDITIONS ALLOW.
3. BEDDING ONLY REQUIRED IF NATIVE DITCH MATERIAL IS NOT SUITABLE, OTHERWISE PIPE CAN REST ON NATIVE SOIL DITCH BOTTOM.
4. NATIVE MATERIAL EXCAVATED FROM DITCH MAY BE USED FOR BEDDING AND PADDING IF SUITABLE.

PRELIMINARY DRAFT FERC APPLICATION
NOT FOR CONSTRUCTION

Appendix 1E TRENCH–01

Alaska Pipeline Project

Trench Modes – Buried Pipe In Excavator Trench

Rev. C

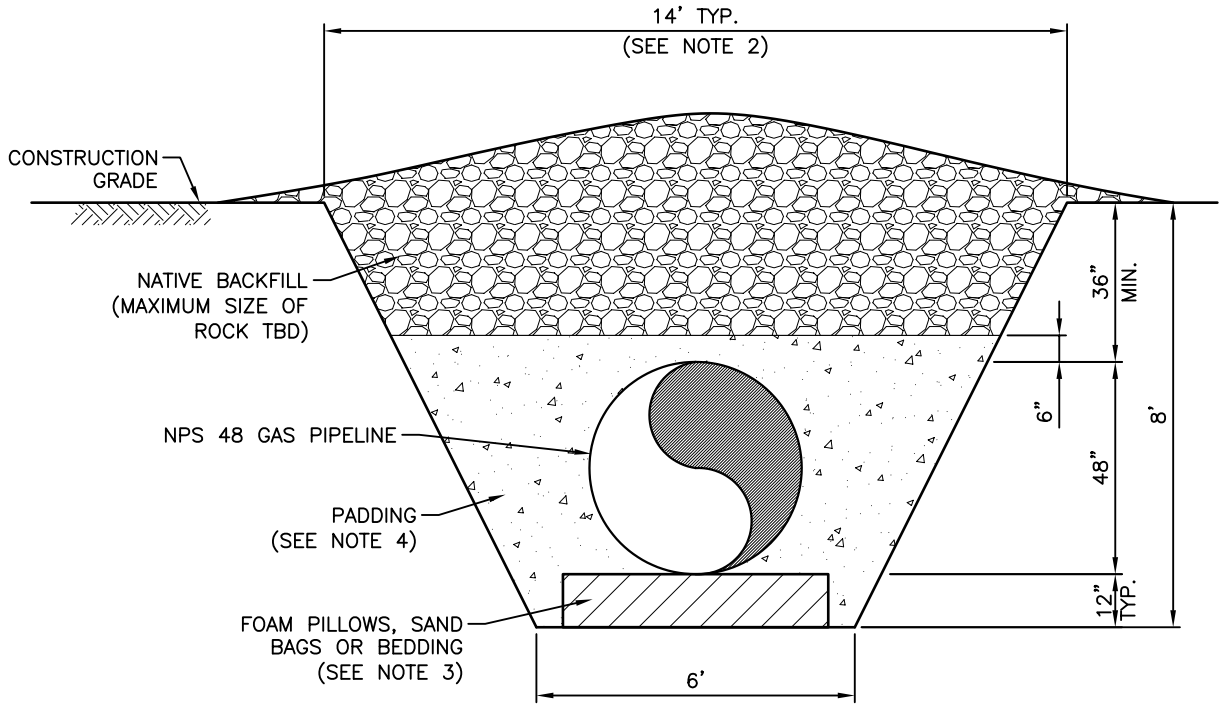

NOTES:

1. MINIMUM DEPTH OF COVER SHOWN FOR TYPICAL CLASS 1, 2 AND 3 LOCATIONS BASED ON ALTERNATIVE MAXIMUM ALLOWABLE OPERATING PRESSURE CRITERIA. ADDITIONAL DEPTH MAY BE REQUIRED FOR CROSSINGS, AREAS REQUIRING BUOYANCY CONTROL, AND OTHER AREAS AS IDENTIFIED SUCH AS ROAD ENCROACHMENTS.
2. DITCH WALLS WILL BE AS VERTICAL AS BEDROCK CONDITIONS ALLOW.
3. FOAM PILLOWS, SAND BAGS OR IMPORT SAND BEDDING REQUIRED TO SUPPORT PIPE.
4. IMPORT SAND PADDING REQUIRED.

PRELIMINARY DRAFT FERC APPLICATION
NOT FOR CONSTRUCTION

Appendix 1E TRENCH–03

Alaska Pipeline Project

Trench Modes – Buried Pipe In Rock Trench

Rev. A

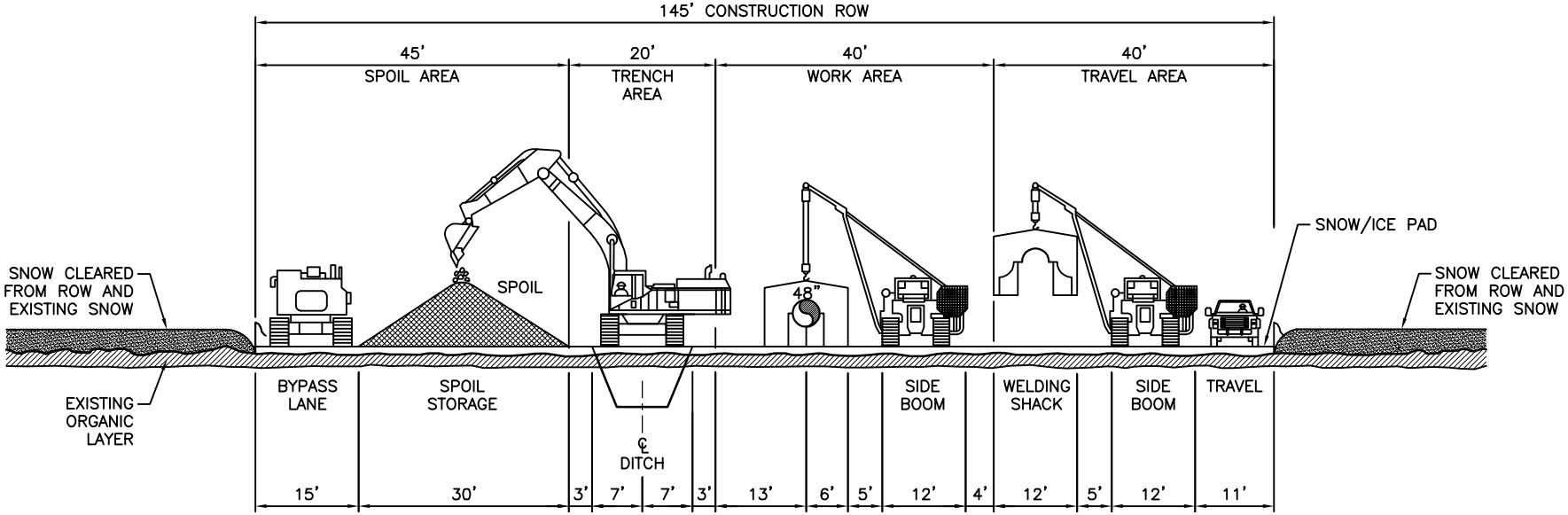

PRELIMINARY DRAFT FERC APPLICATION
NOT FOR CONSTRUCTION

Appendix 1E ROW–01

Alaska Pipeline Project

Right–of–Way Modes – North Slope (Winter)

Rev.
B

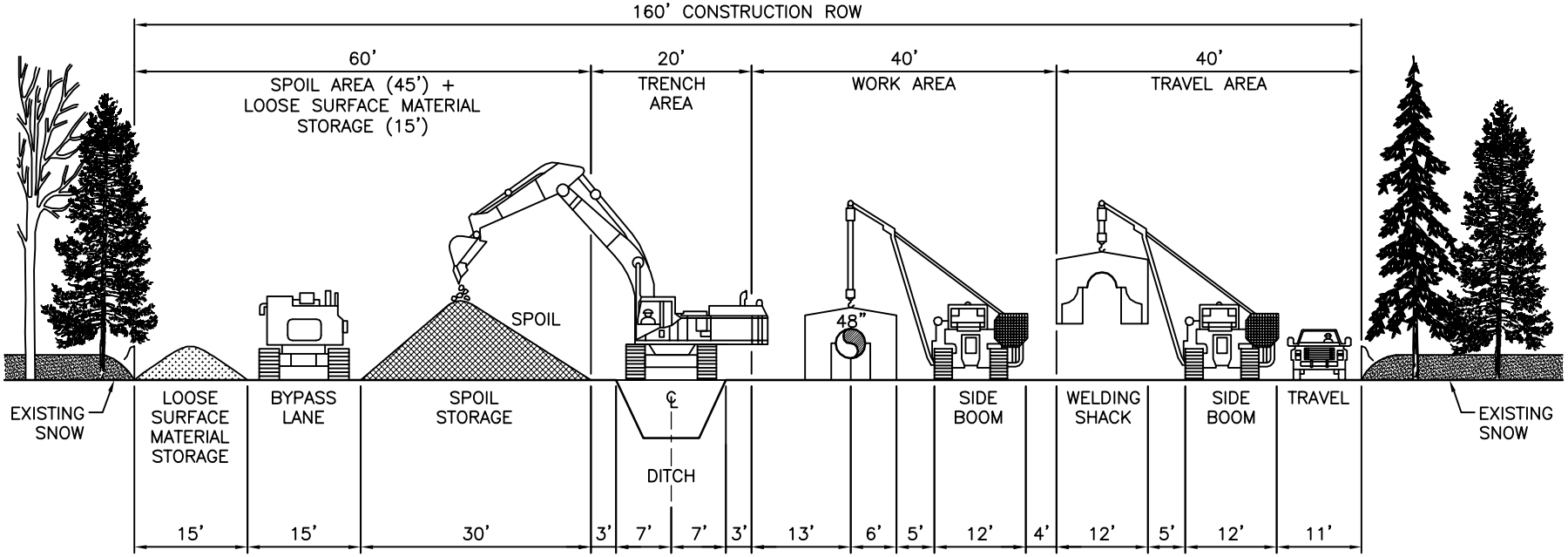

PRELIMINARY DRAFT FERC APPLICATION
NOT FOR CONSTRUCTION

Appendix 1E ROW–02

Alaska Pipeline Project

Right–of–Way Modes – Winter

Rev.
E

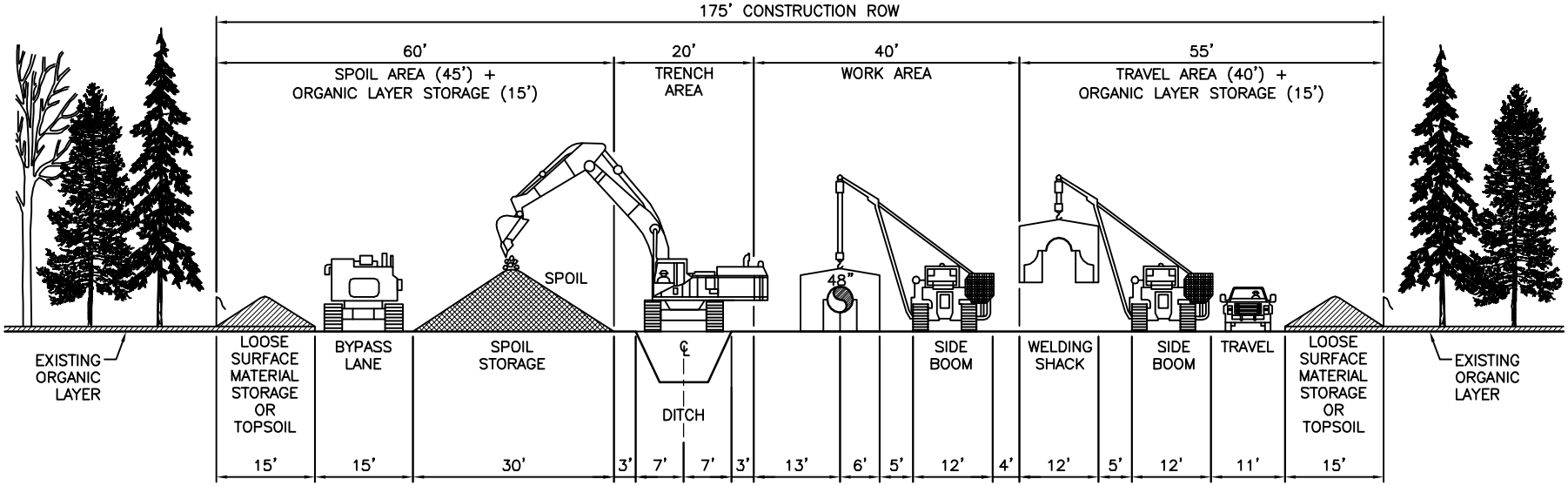

NOTE:

1. FULL WIDTH TOPSOIL LAYER STRIPPING ON SOME AGRICULTURAL LANDS ONLY (WIDTH SHOWN BASED ON 6" OF STRIPPING).

PRELIMINARY DRAFT FERC APPLICATION
NOT FOR CONSTRUCTION

Appendix 1E ROW–03

Alaska Pipeline Project

Right–of–Way Modes – Summer

Rev.
D

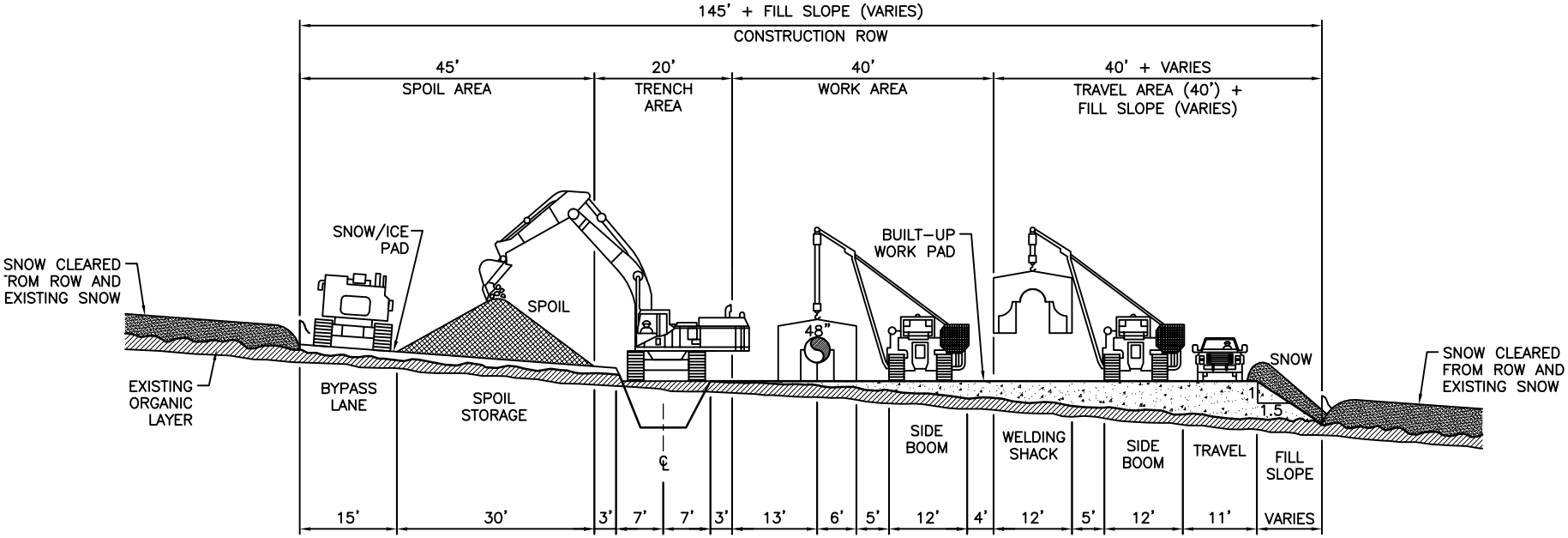

NOTES:

1. GEOTEXTILE AND GEOGRID REINFORCEMENT MAY BE PLACED AT BASE OF BUILT-UP WORK PAD TO REDUCE DISTURBANCE OF THE TUNDRA PERMAFROST.
2. NOMINAL CONFIGURATION FOR MAXIMUM OF 10% CROSS SLOPE.

PRELIMINARY DRAFT FERC APPLICATION
NOT FOR CONSTRUCTION

Appendix 1E ROW-04

Alaska Pipeline Project

Right-of-Way Modes – Cross Slopes – North Slope (Winter)

Rev. B

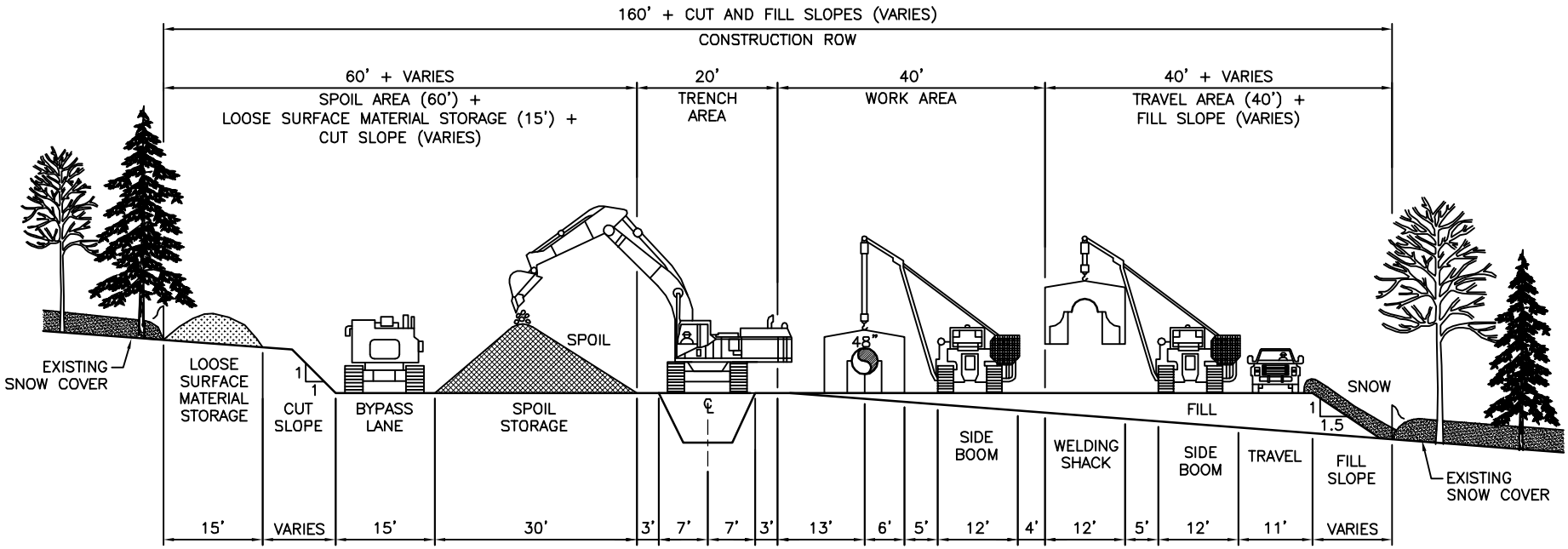

PRELIMINARY DRAFT FERC APPLICATION
NOT FOR CONSTRUCTION

Appendix 1E ROW–05

Alaska Pipeline Project

Right–of–Way Modes – Cross Slopes (Winter)

Rev.
E

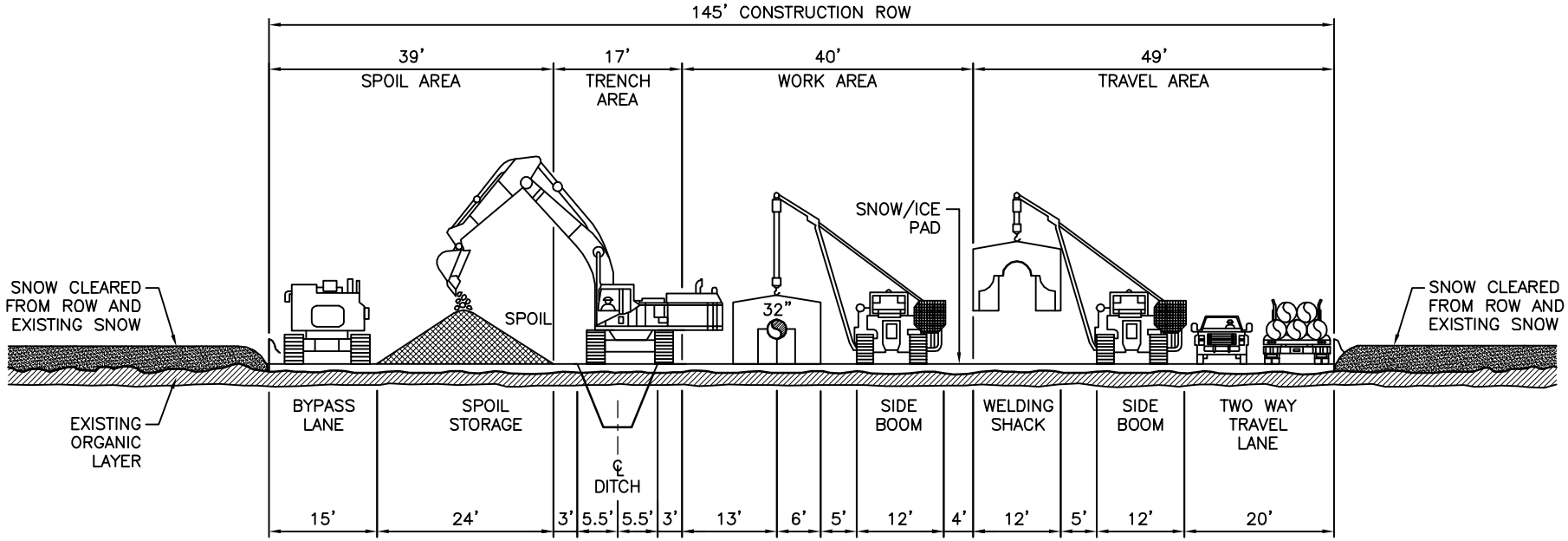

PRELIMINARY DRAFT FERC APPLICATION
NOT FOR CONSTRUCTION

Appendix 1E ROW–06

Alaska Pipeline Project

Right–of–Way Modes – Point Thomson Gas Transmission Pipeline (Winter)

Rev. C

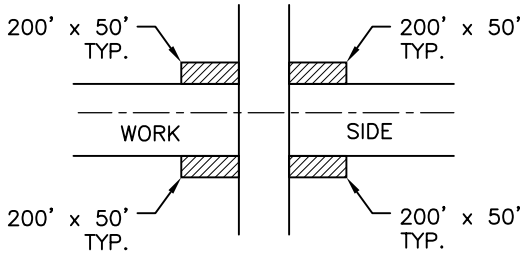

ROAD CROSSING
(BORED)

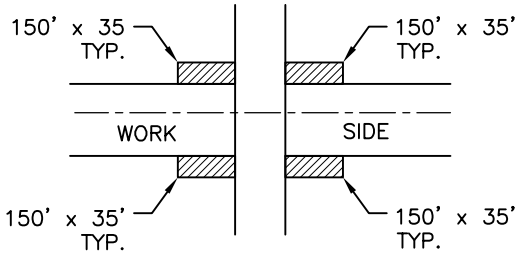

ROAD CROSSING
(OPEN CUT)

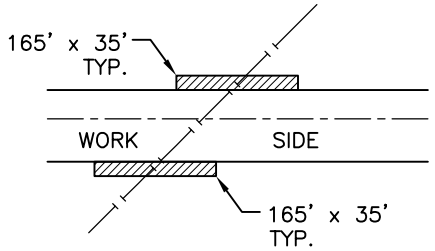

FOREIGN PIPELINE
CROSSING

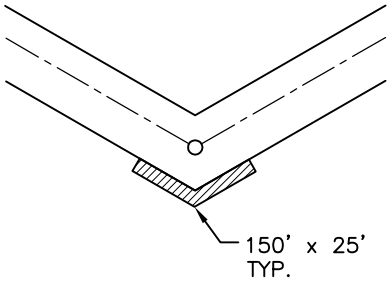

BEND

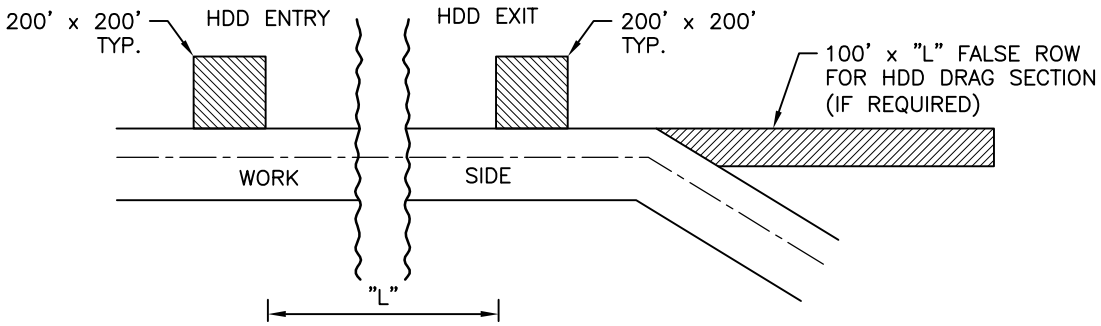

HORIZONTAL DIRECTIONAL
DRILL (HDD)

PROPOSED GAS PIPELINE

CONSTRUCTION ROW BOUNDARY

PRELIMINARY DRAFT FERC APPLICATION
NOT FOR CONSTRUCTION

Appendix 1E ROW–21

Alaska Pipeline Project

Right–of–Way Modes – Additional Temporary Workspace 1/2

Rev. C

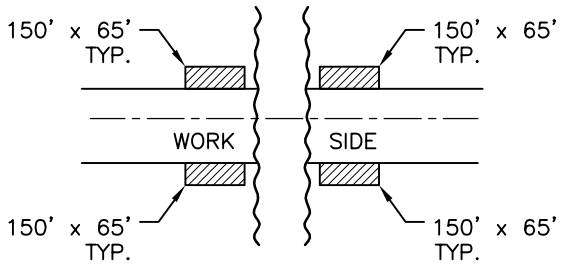

WATERCOURSE
CROSSING <50' WIDE

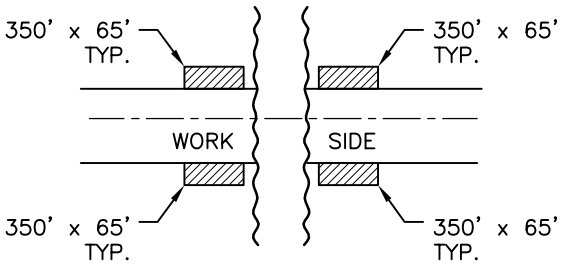

WATERCOURSE
CROSSING >50' WIDE

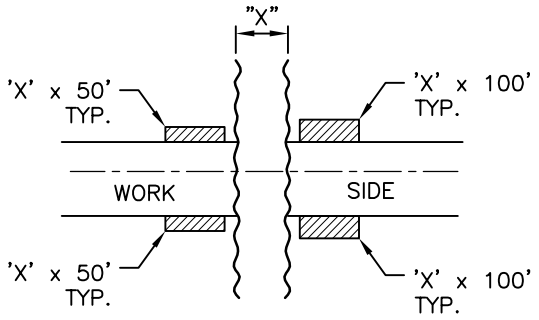

WETLAND CROSSING

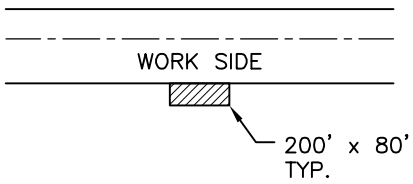

TURN AROUND

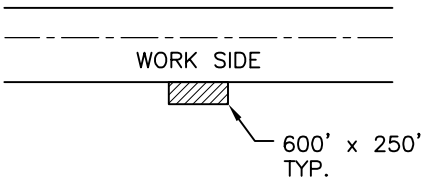

BEGINNING/END OF SPREAD

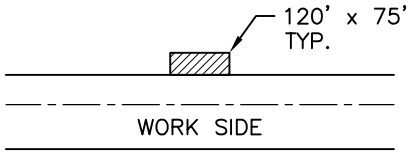

TIMBER DECK

PROPOSED GAS PIPELINE

CONSTRUCTION ROW BOUNDARY

PRELIMINARY DRAFT FERC APPLICATION
NOT FOR CONSTRUCTION

Appendix 1E ROW–22

Alaska Pipeline Project

Right–of–Way Modes – Additional Temporary Workspace 2/2

Rev. C

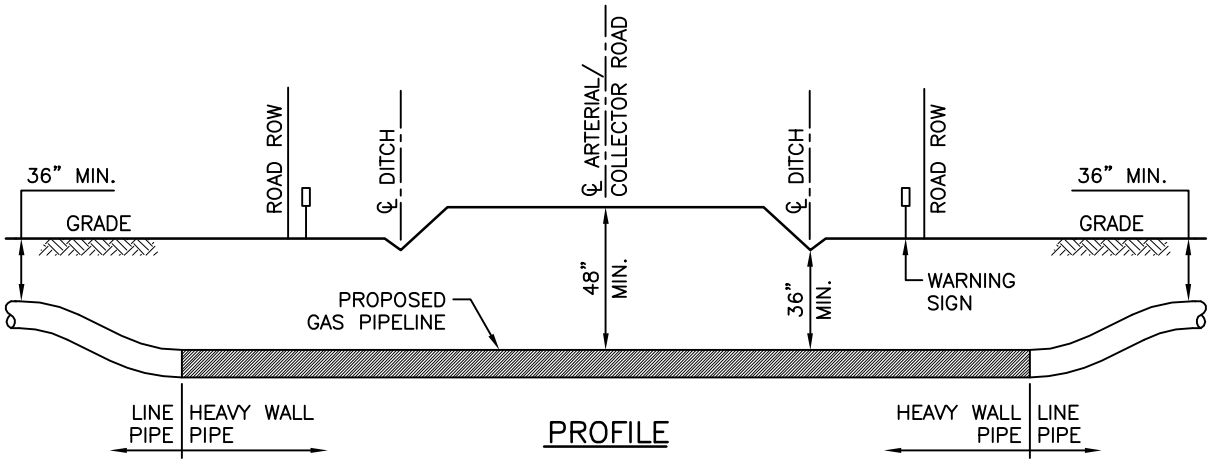

PROFILE

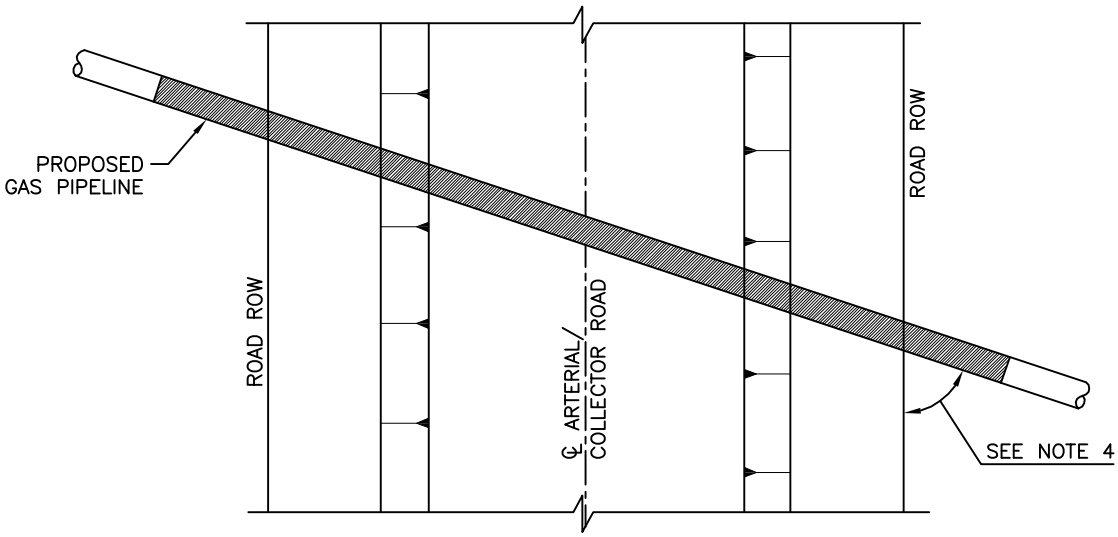

PLAN

NOTES:

1. WARNING SIGNS TO BE INSTALLED ON EACH SIDE OF ROAD ROW.
2. MINIMUM DEPTHS OF COVER SHOWN, CROSSING AGREEMENTS MAY DICTATE ADDITIONAL DEPTH.
3. CROSSING ANGLE TO BE AS CLOSE AS POSSIBLE TO 90° OR AS SPECIFIED IN THE CROSSING AGREEMENT.

PRELIMINARY DRAFT FERC APPLICATION
NOT FOR CONSTRUCTION

Appendix 1E ROAD–01

Alaska Pipeline Project

Road Crossings – Arterial Highways/Collector Roads

Rev. E

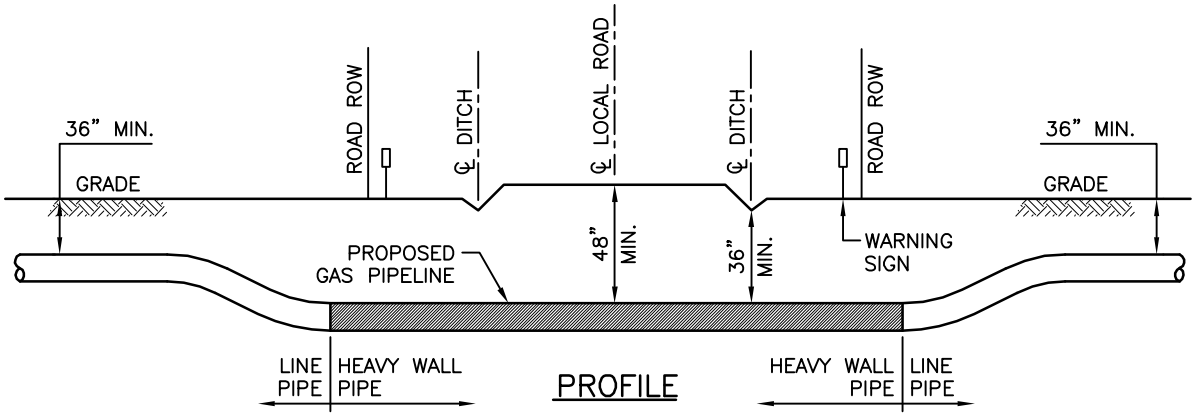

PROFILE

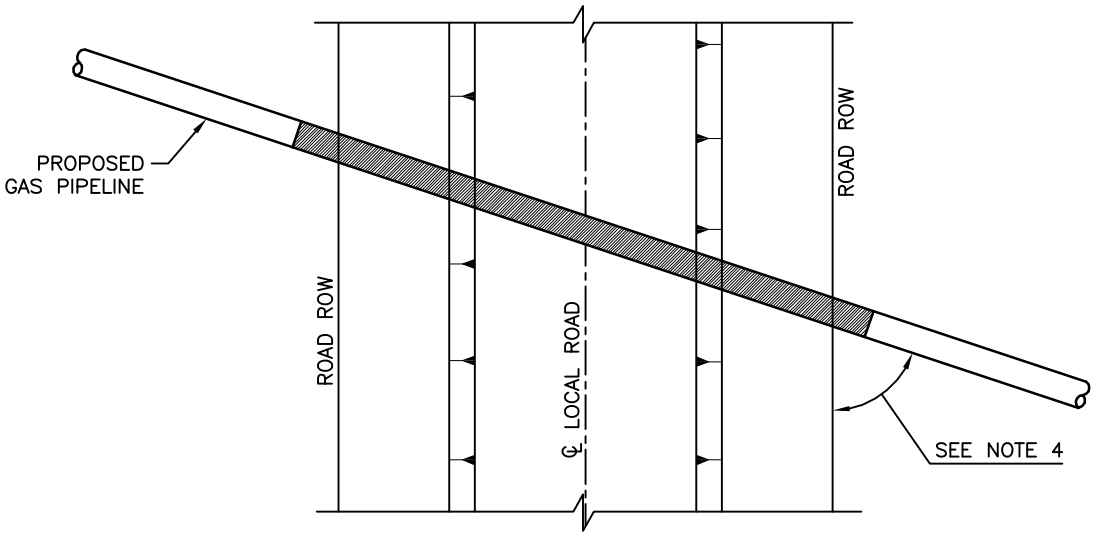

PLAN

NOTES:

1. WARNING SIGNS TO BE INSTALLED ON EACH SIDE OF ROAD ROW.
2. MINIMUM DEPTHS OF COVER SHOWN, CROSSING AGREEMENTS MAY DICTATE ADDITIONAL DEPTH.
3. CROSSING ANGLE TO BE AS CLOSE AS POSSIBLE TO 90° OR AS SPECIFIED IN THE CROSSING AGREEMENT.

PRELIMINARY DRAFT FERC APPLICATION
NOT FOR CONSTRUCTION

Appendix 1E ROAD–02

Alaska Pipeline Project

Road Crossings – Local Roads

Rev. E

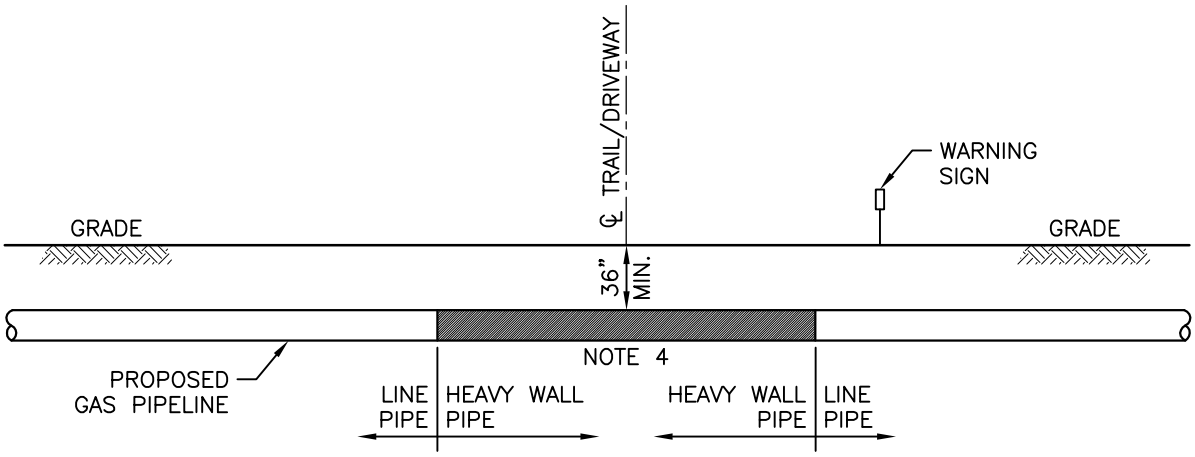

PROFILE

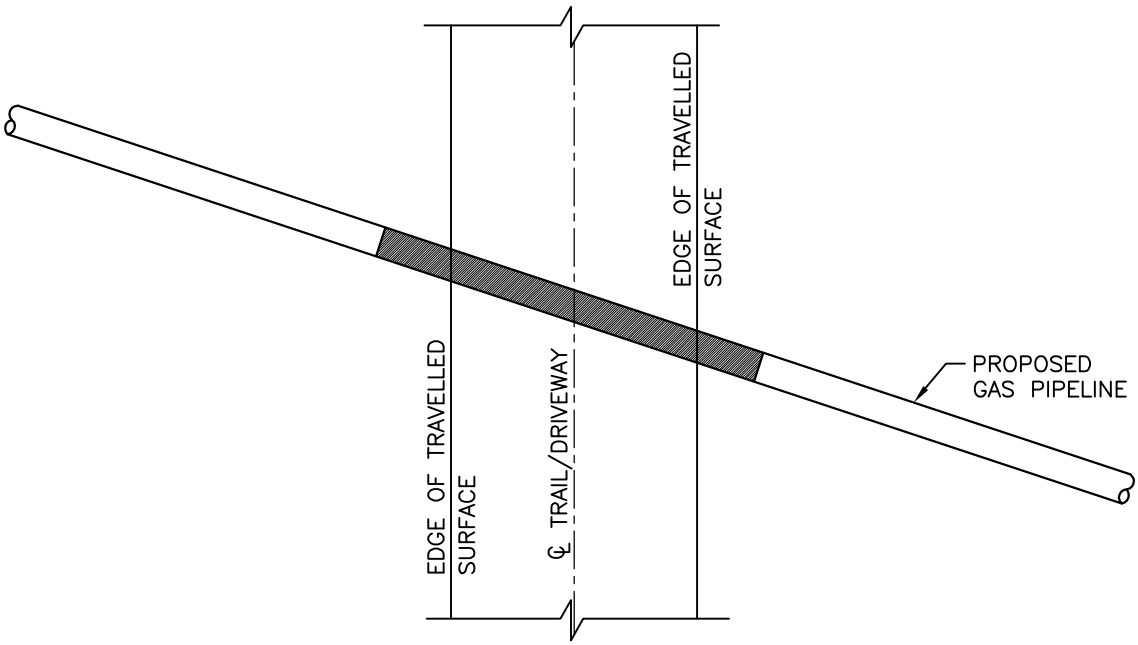

PLAN

NOTES:

1. BENDS SHALL NOT BE PERMITTED UNDER TRAVELLED SURFACE.
2. WARNING SIGN TO BE INSTALLED ON ONE SIDE OF TRAIL/DRIVEWAY.
3. MINIMUM DEPTH OF COVER SHOWN, CROSSING AGREEMENT MAY DICTATE ADDITIONAL DEPTH.
4. TYPICALLY ONE JOINT OF HEAVY WALL PIPE INSTALLED AT TRAILS/DRIVEWAYS.

PRELIMINARY DRAFT FERC APPLICATION
NOT FOR CONSTRUCTION

Appendix 1E ROAD–03

Alaska Pipeline Project

Road Crossings – Trails And Driveways

Rev. C

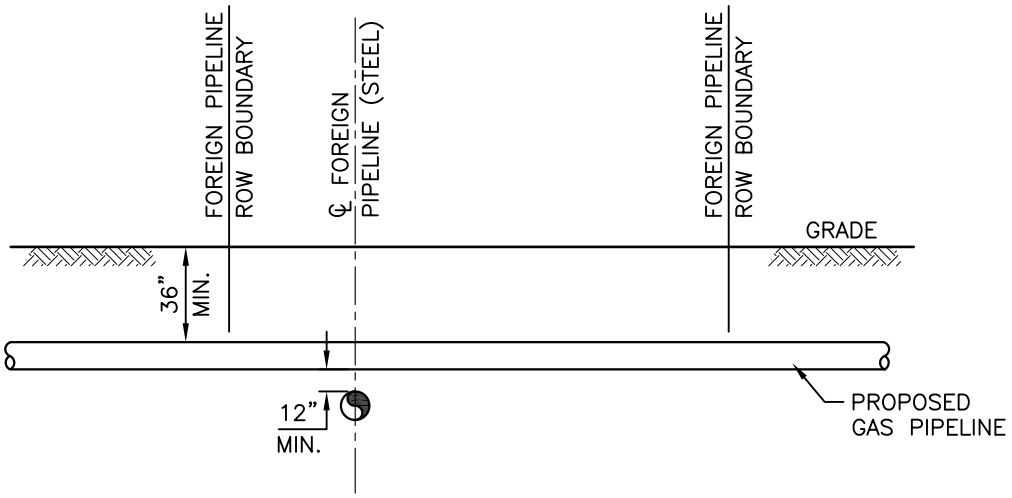

DETAIL "A"

NEW PIPELINE IS PLACED OVER EXISTING FOREIGN PIPELINE

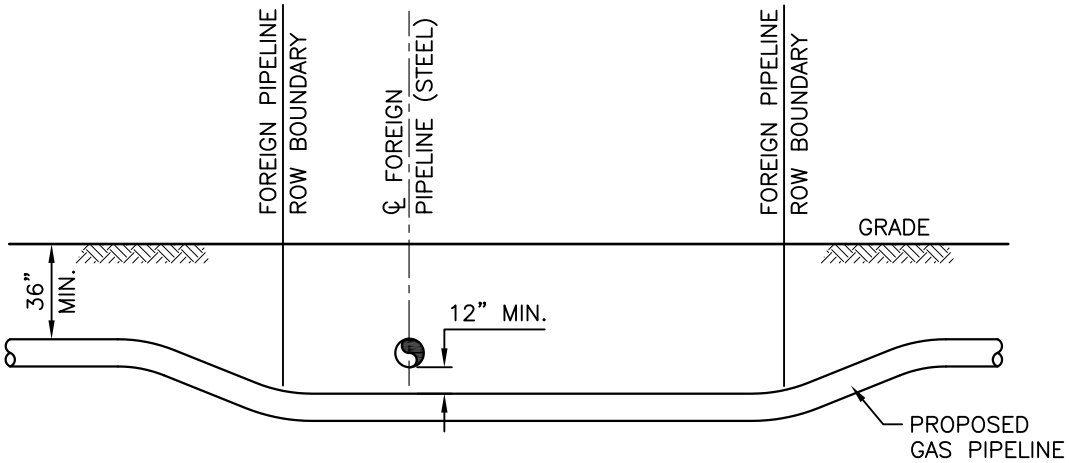

DETAIL "B"

NEW PIPELINE IS PLACED UNDER EXISTING FOREIGN PIPELINE

PRELIMINARY DRAFT FERC APPLICATION
NOT FOR CONSTRUCTION

Appendix 1E FP–01

Alaska Pipeline Project

Foreign Pipeline And Utility Crossings – Foreign Pipelines

Rev. D

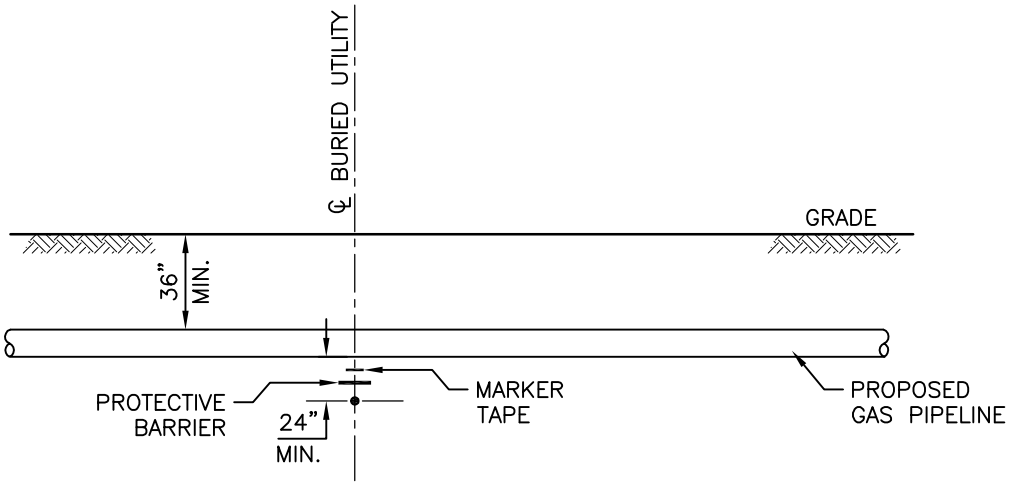

DETAIL "A"

NEW PIPELINE IS PLACED OVER EXISTING BURIED UTILITY

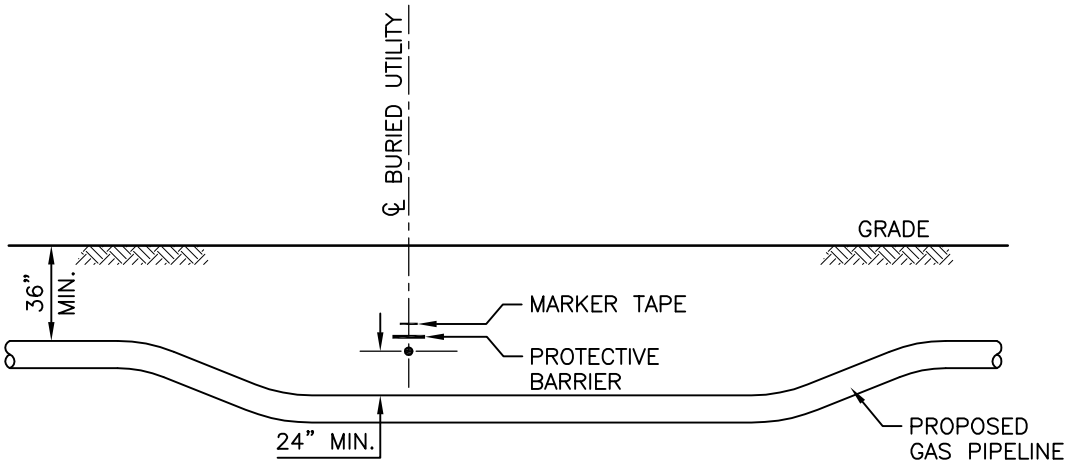

DETAIL "B"

NEW PIPELINE IS PLACED UNDER EXISTING BURIED UTILITY

PRELIMINARY DRAFT FERC APPLICATION
NOT FOR CONSTRUCTION

Appendix 1E UT–01

Alaska Pipeline Project

Foreign Pipeline And Utility Crossings – Buried Utility

Rev. C

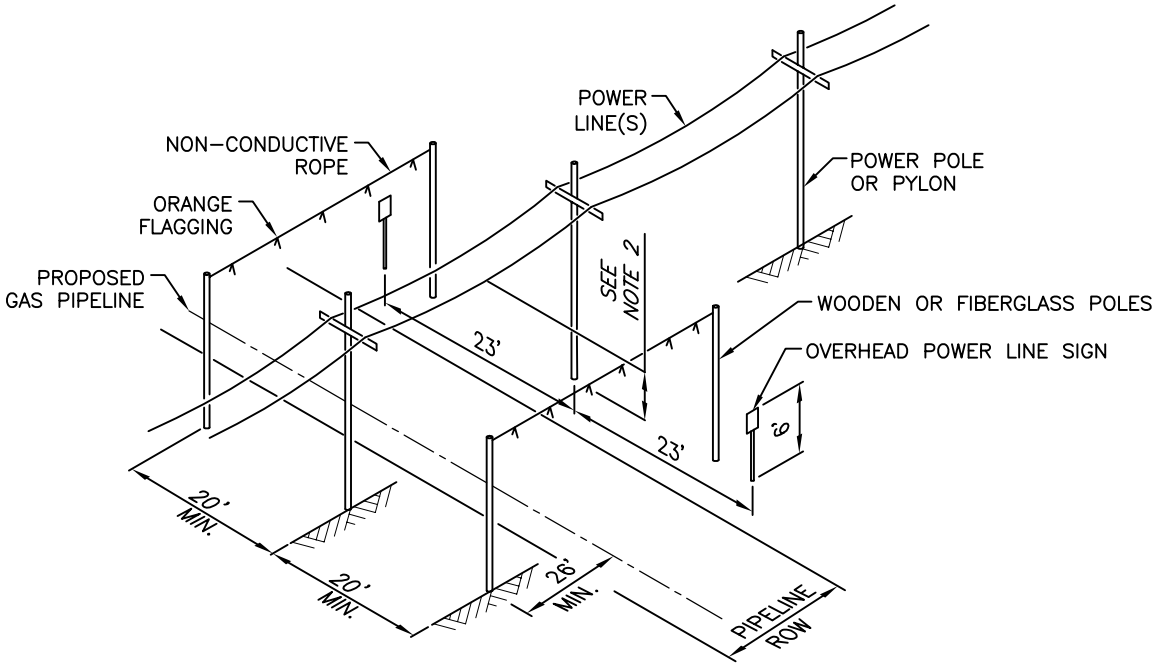

MINIMUM SAFE LIMITS OF APPROACH DISTANCES FOR PERSONS AND EQUIPMENT	
OPERATING VOLTAGE OF OVERHEAD POWER LINE BETWEEN CONDUCTORS	DISTANCE
0 – 750 V (INSULATED OR POLYETHYLENE COVERED CONDUCTORS – NOTE 4	12"
ABOVE 750 V (INSULATED CONDUCTORS – NOTES 4,5)	40"
0 – 40 000 V	10'
69 000 – 72 000 V	11'–6"
138 000 – 144 000 V	13'
230 000 – 240 000 V	16'–6"
500 000 V	23'

NOTES:

1. OVERHEAD POWER LINE SIGNS, SHALL BE PLACED APPROXIMATELY 23' ON EITHER SIDE OF THE OVERHEAD POWER LINES IN PLAIN VIEW OF THOSE TRAVELLING IN EITHER DIRECTION UNDER THE LINES.
2. THE ABOVE CLEARANCES APPLY IN ALL DIRECTIONS, VERTICAL OR HORIZONTAL.
3. ALL POLES, SIGNS, FLAGGING, ETC. TO BE REMOVED FROM CROSSING SITE AFTER CLEAN–UP.
4. A MINIMUM OF 26' HORIZONTAL SEPARATION SHALL BE MAINTAINED FROM ALL POLES AND STRUCTURES ASSOCIATED WITH AN OVERHEAD POWERLINE UNLESS OTHERWISE SPECIFIED BY THE FOREIGN LINE OWNER IN WRITING, GREATER DISTANCES MAY BE IMPOSED.
5. CONDUCTORS MUST BE INSULATED OR COVERED THROUGHOUT THEIR ENTIRE LENGTH TO COMPLY WITH THESE GROUPS.
6. CONDUCTORS MUST BE MANUFACTURED TO RATED AND TESTED INSULATION LEVELS.

PRELIMINARY DRAFT FERC APPLICATION
NOT FOR CONSTRUCTION

Appendix 1E UT–02

Alaska Pipeline Project

Foreign Pipeline And Utility Crossings – Above Ground Utility

Rev. C

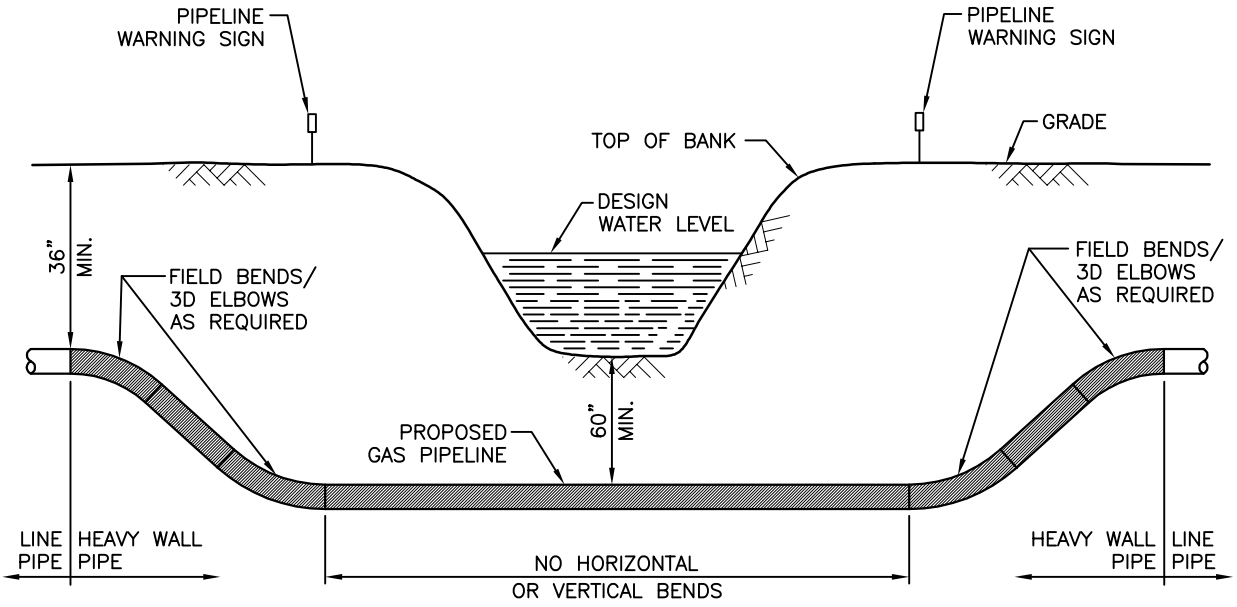

PROFILE

NOTES:

1. CROSSING SHALL BE CONSTRUCTED IN ACCORDANCE WITH APPROVED METHOD(S) FROM AUTHORITIES HAVING JURISDICTION.
2. EROSION CONTROL DESIGN SHALL BE IMPLEMENTED AS PER THE SEDIMENT AND EROSION CONTROL PLAN.
3. INSTALL APPROVED AND APPROPRIATE VEHICLE CROSSING AS REQUIRED.
4. ALL MAJOR AND INTERMEDIATE WATERBODY CROSSINGS WILL HAVE A DETAILED SITE SPECIFIC CROSSING DRAWING INCLUDING RECLAMATION PLANS. PROFILE SHOWN IS FOR ILLUSTRATIVE PURPOSES ONLY. MINIMUM DEPTH OF COVER WILL ALSO BE SITE SPECIFIC.

PRELIMINARY DRAFT FERC APPLICATION
NOT FOR CONSTRUCTION

Appendix 1E WB–01

Alaska Pipeline Project

Waterbody Crossings – Major/Intermediate – Trenched

Rev. C

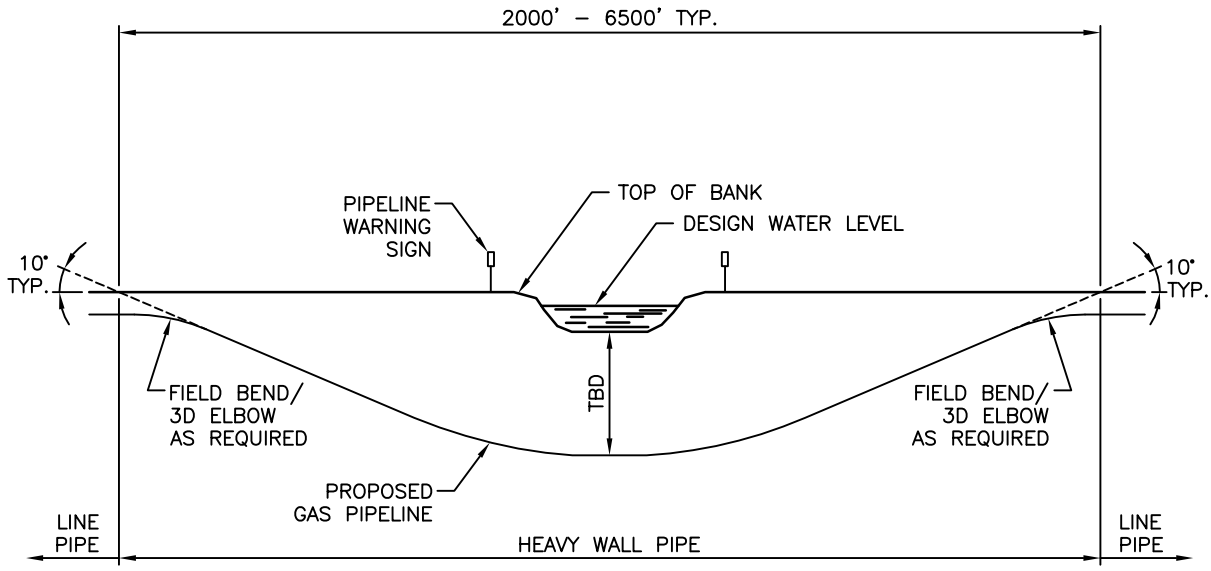

PROFILE

NOTES:

1. OBTAIN GEOTECHNICAL DATA, PRIOR TO INITIATING DRILLING. DRILLING MAY NOT BE FEASIBLE IN SOME MATERIALS SUCH AS UNCONSOLIDATED GRAVELS.
2. PREPARE A DRILLING MUD RELEASE CONTINGENCY PLAN.
3. SET UP DRILLING EQUIPMENT BACK FROM THE EDGE OF THE WATERCOURSE; DO NOT CLEAR WITHIN THE VEGETATED BUFFER ZONE EXCEPT ALONG THE WORK SIDE, IF TEMPORARY VEHICLE CROSSING IS INSTALLED.
4. MONITOR WATERCOURSE AND SURROUNDING AREA ALONG THE DRILL PATH FOR AN INADVERTENT MUD RELEASE.
5. ENSURE THAT ONLY BENONITE BASED DRILLING MUD IS USED. DO NOT ALLOW THE USE OF ANY ADDITIVES TO THE DRILLING MUD WITHOUT THE APPROVAL OF PROPER REGULATORY AUTHORITIES.
6. EXCAVATE SUMPS AT THE DRILL ENTRY AND ANTICIPATED EXIT POINTS TO CONTAIN THE DRILLING MUD.
7. DISPOSE DRILLING MUD IN ACCORDANCE WITH THE APPROPRIATE REGULATORY AUTHORITY REQUIREMENTS.
8. ALL HDD INSTALLATIONS WILL HAVE A DETAILED SITE SPECIFIC CROSSING DRAWING.

PRELIMINARY DRAFT FERC APPLICATION
NOT FOR CONSTRUCTION

Appendix 1E WB–02

Alaska Pipeline Project

Waterbody Crossings – Major/Intermediate – HDD

Rev. C

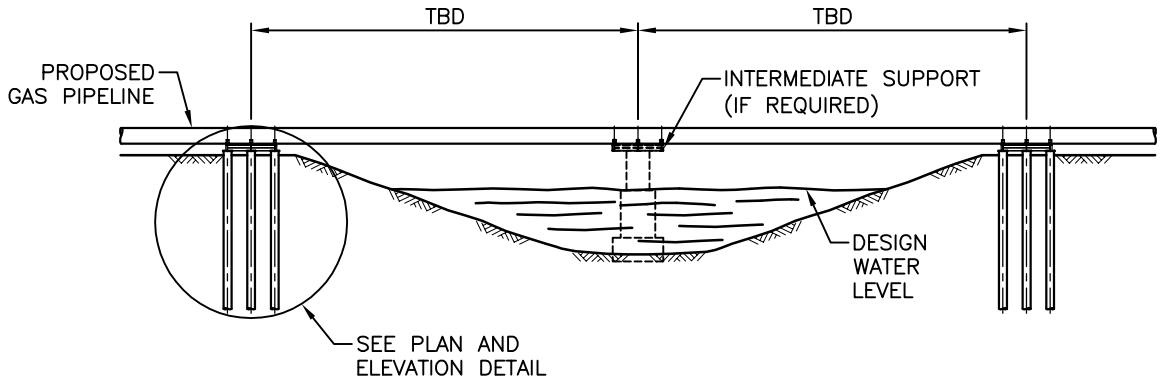

ELEVATION

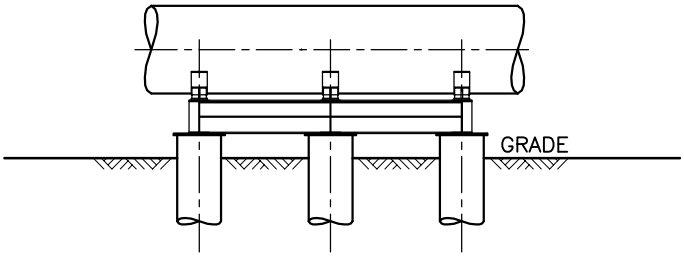

ELEVATION

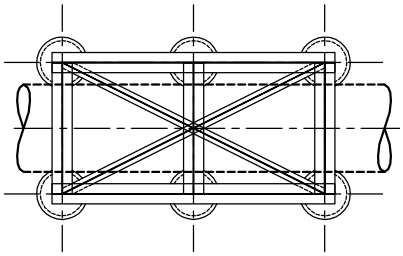

PLAN

NOTES:

1. CONCEPTUAL DESIGN FOR ILLUSTRATIVE PURPOSES ONLY.
2. EXPANSION LOOP MAY BE REQUIRED AT ONE END OF UNSUPPORTED SPAN.

PRELIMINARY DRAFT FERC APPLICATION NOT FOR CONSTRUCTION

Appendix 1E WB–03A

Alaska Pipeline Project

Waterbody Crossings – Major/Intermediate–Unsupported Span Bridge

Rev. C

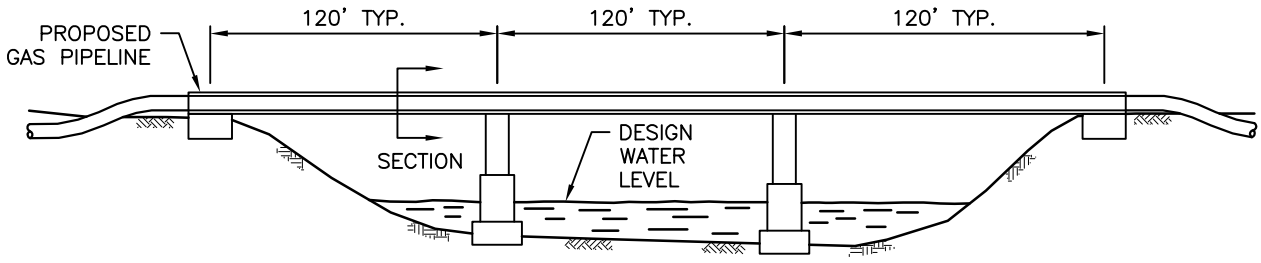

ELEVATION

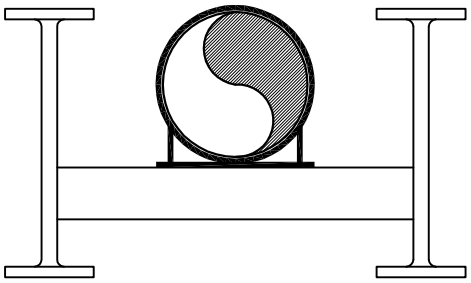

SECTION

NOTE:

1. CONCEPTUAL DESIGN FOR ILLUSTRATIVE PURPOSES ONLY.

PRELIMINARY DRAFT FERC APPLICATION
NOT FOR CONSTRUCTION

Appendix 1E WB–03B

Alaska Pipeline Project

Waterbody Crossings – Major/Intermediate–Simply Supported Span Bridge

Rev. C

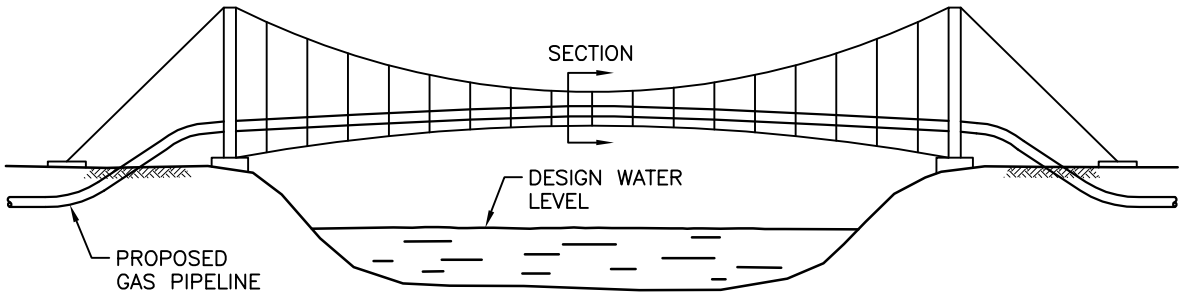

ELEVATION

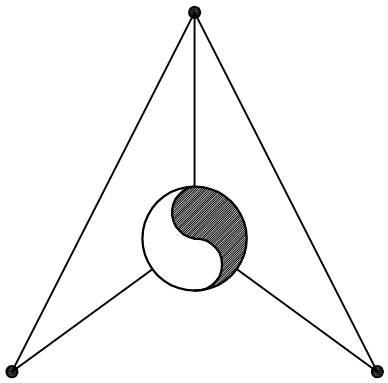

SECTION

NOTE:

1. CONCEPTUAL DESIGN FOR ILLUSTRATIVE PURPOSES ONLY.

PRELIMINARY DRAFT FERC APPLICATION
NOT FOR CONSTRUCTION

Appendix 1E WB–03C

Alaska Pipeline Project

Waterbody Crossings – Major/Intermediate – Cable Supported Span

Rev. A

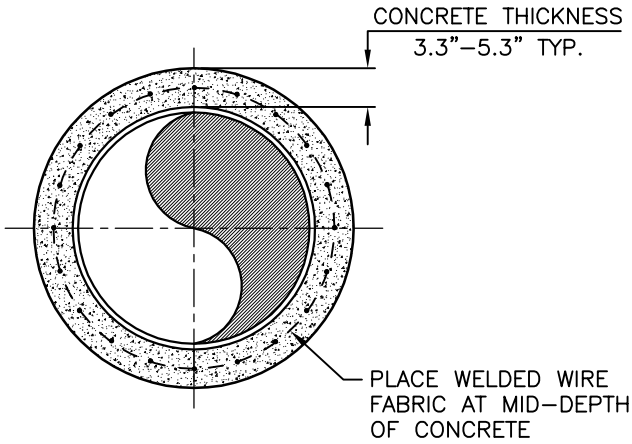

SECTION A

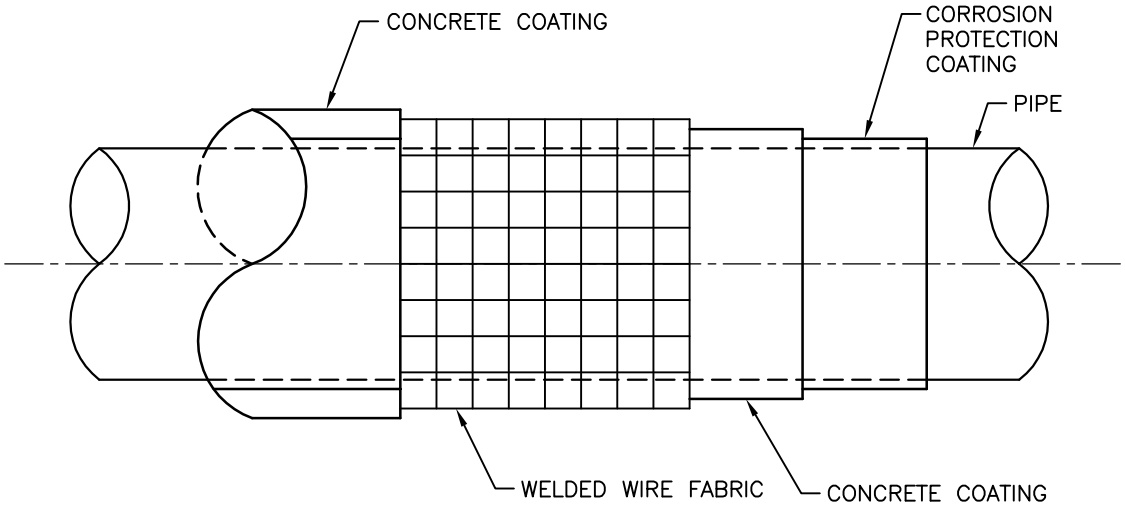

ELEVATION

PRELIMINARY DRAFT FERC APPLICATION
NOT FOR CONSTRUCTION

Appendix 1E BC–01

Alaska Pipeline Project

Buoyancy Control – Concrete Coating

Rev. C

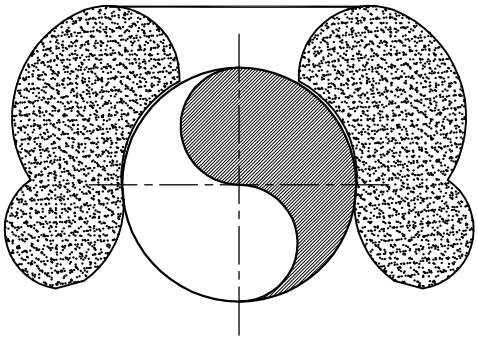

SECTION

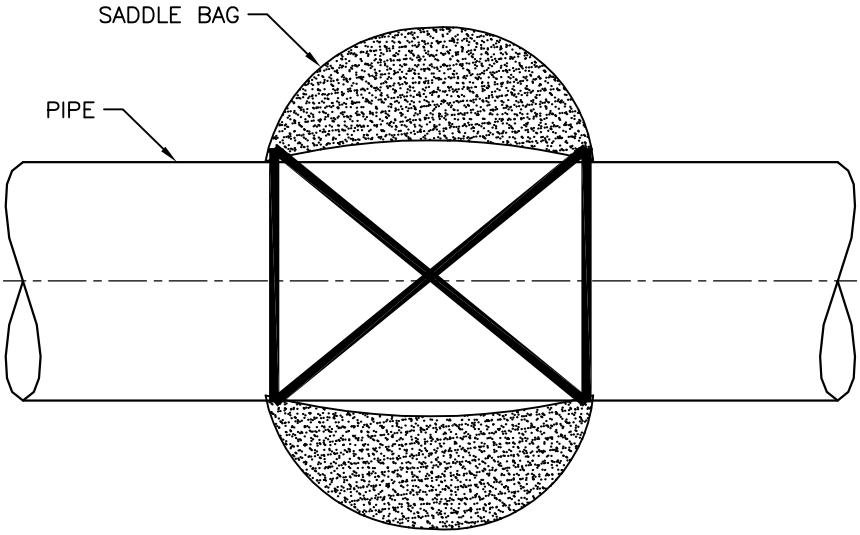

PLAN

PRELIMINARY DRAFT FERC APPLICATION
NOT FOR CONSTRUCTION

Appendix 1E BC–02

Alaska Pipeline Project

Buoyancy Control – Saddle Bags

Rev. C

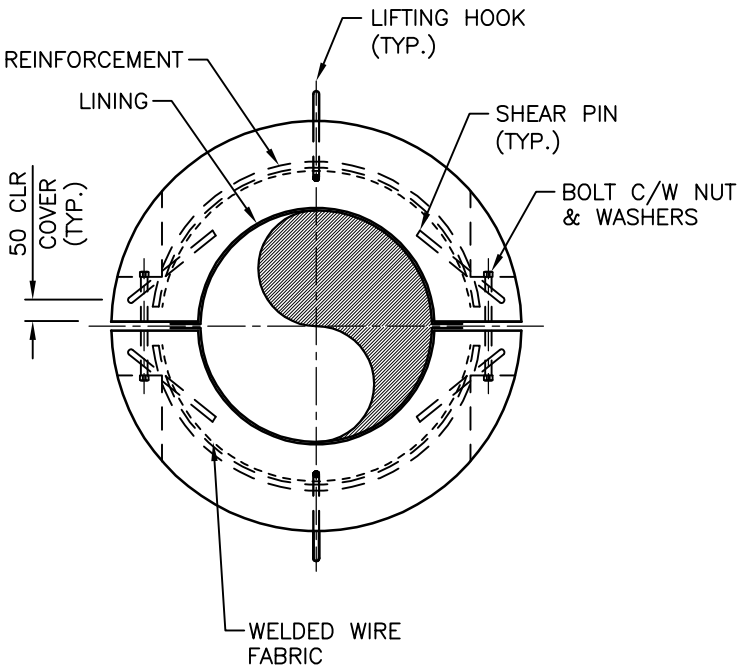

SECTION

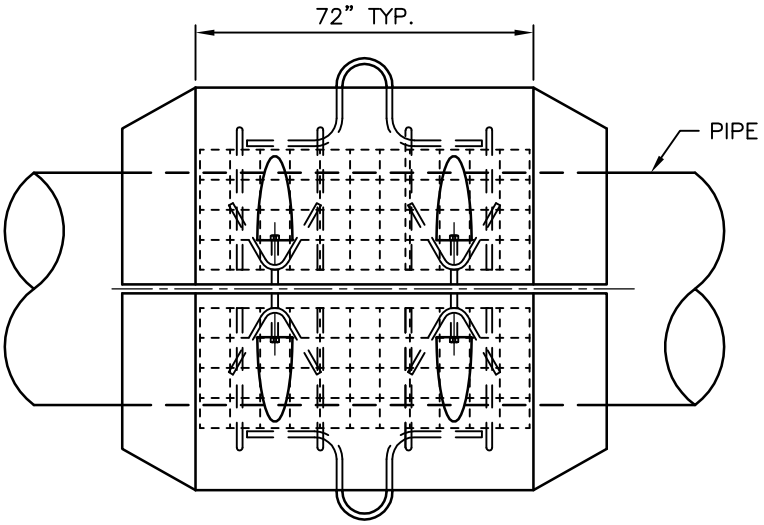

ELEVATION

PRELIMINARY DRAFT FERC APPLICATION
NOT FOR CONSTRUCTION

Appendix 1E BC–03

Alaska Pipeline Project

Buoyancy Control – Bolt–on River Weights

Rev. C

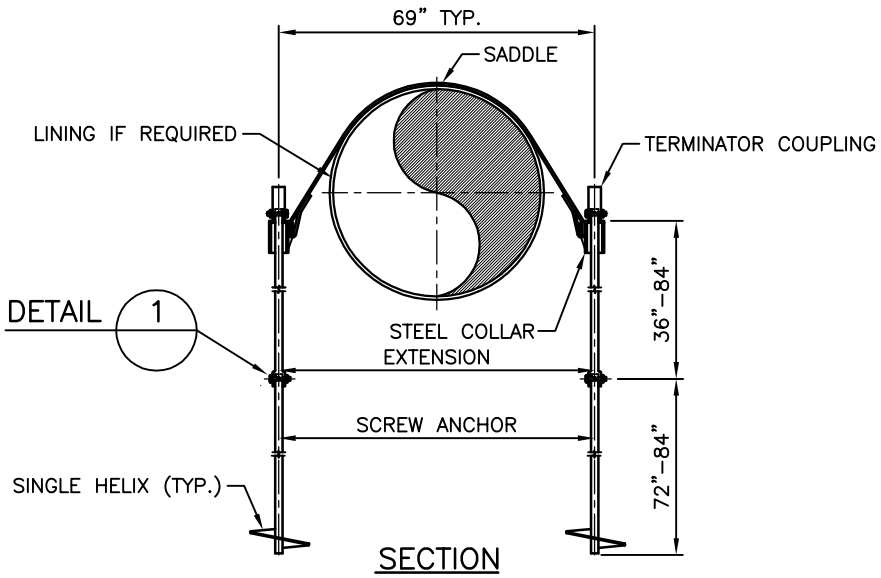

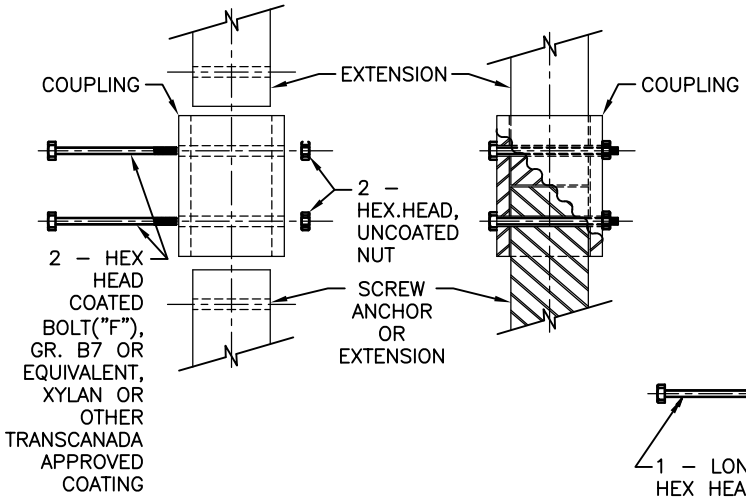

CONNECTION DETAIL 1
OPTION A

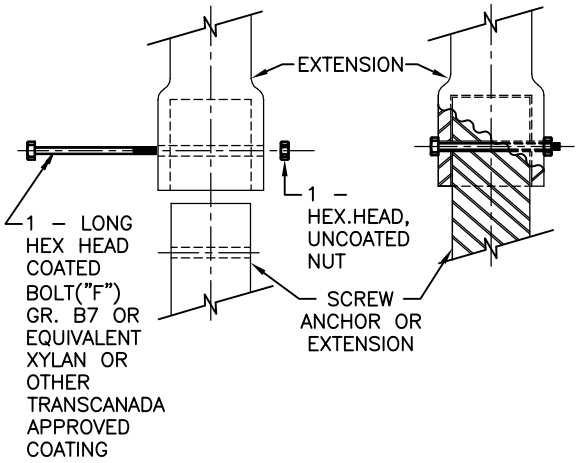

CONNECTION DETAIL 1
OPTION B

PRELIMINARY DRAFT FERC APPLICATION
NOT FOR CONSTRUCTION

Appendix 1E BC–04

Alaska Pipeline Project

Buoyancy Control – Screw Anchors

Rev. C

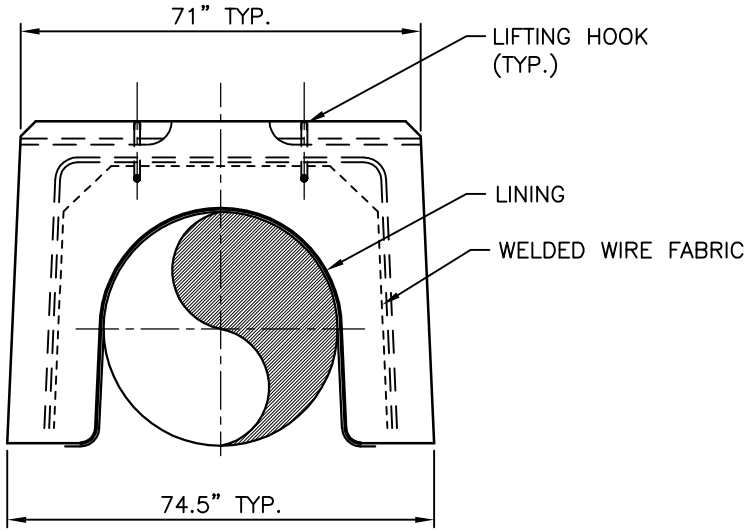

SECTION

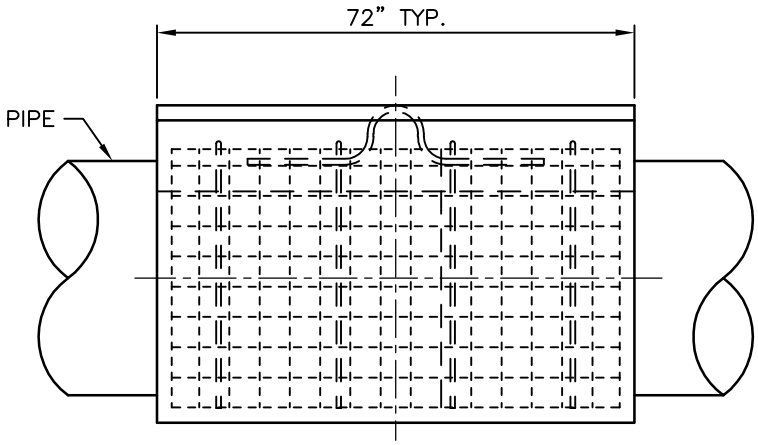

ELEVATION

PRELIMINARY DRAFT FERC APPLICATION
NOT FOR CONSTRUCTION

Appendix 1E BC–05

Alaska Pipeline Project

Buoyancy Control – Set–on Weights

Rev. C

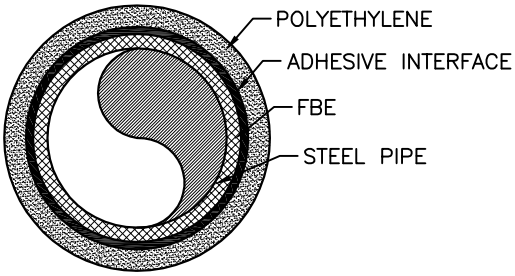

HIGH PERFORMANCE COMPOSITE COATING (HPCC)

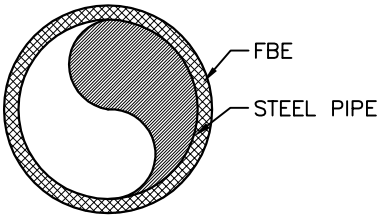

FUSION BONDED EPOXY (FBE)

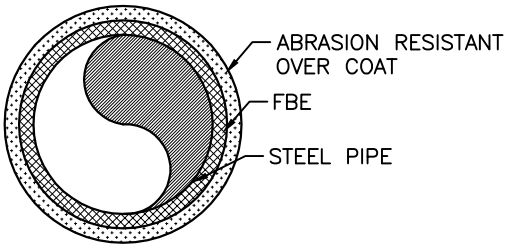

ABRASION COATED FBE

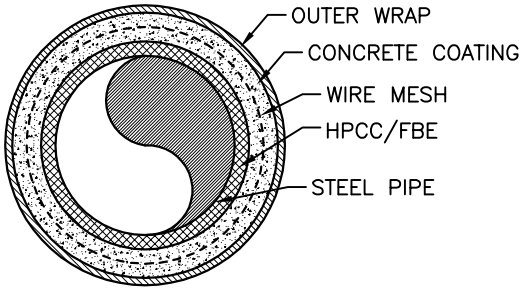

CONCRETE ROCK PROTECTION

PRELIMINARY DRAFT FERC APPLICATION
NOT FOR CONSTRUCTION

Appendix 1E CC–01

Alaska Pipeline Project

Corrosion Control – Coatings

Rev. C

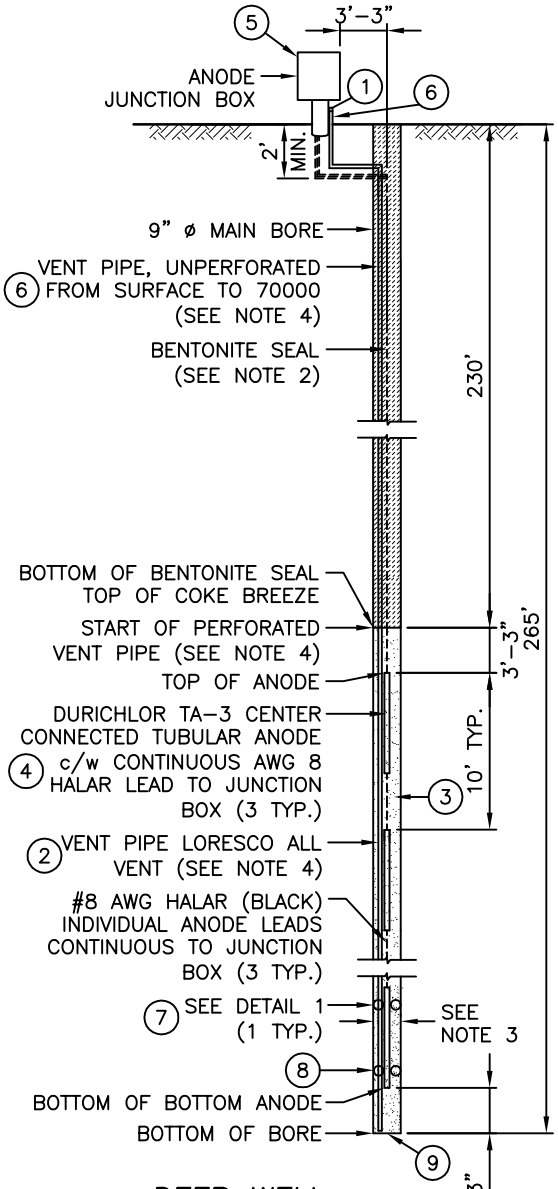

DEEP WELL ANODE BED

MATERIALS LIST

No.	DESCRIPTION	QTY
1	SCREENED CAP FOR 1" PVC VENT PIPE	1
2	1" DIAMETER CONTINUOUS VENT PIPE, PERFORATED (SEE NOTE 4)	39'-4"
3	CALCINED PETROLEUM COKE BREEZE	1100 lb
4	DURICHLOR TA-3, 2.6" x 7' (OR EQUIVALENT) CENTER CONNECTED TUBULAR SiFeCr ALLOY ANODE, c/w #8 AWG INDIVIDUAL HALAR LEAD WIRE CONTINUOUS TO JUNCTION BOX	4
5	4 CIRCUIT ANODE JUNCTION BOX	1
6	1" DIAMETER CONTINUOUS UNPERFORATED PVC VENT PIPE (SEE NOTE 4)	246'
7	ANODE CENTRALIZERS (TOP)	12
8	ANODE CENTRALIZERS (BOTTOM)	12
9	END CAP FOR 1" PVC VENT PIPE	1

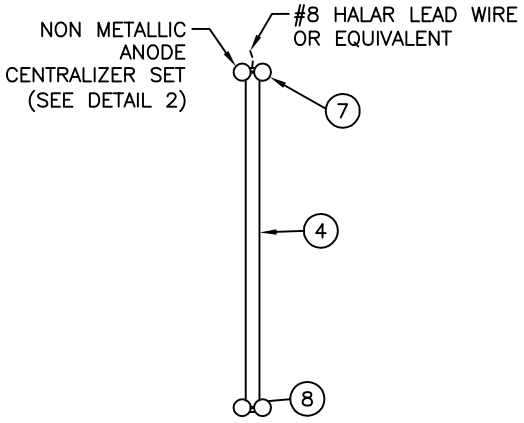

DETAIL 1
ANODE DETAIL

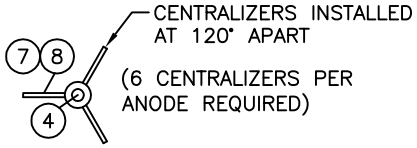

DETAIL 2
ANODE CENTRALIZER

NOTES:

1. ALL DIMENSIONS IN mm UNLESS OTHERWISE NOTED.
2. THE BENTONITE SEAL IS TO EXTEND FROM THE TOP OF THE COKE BREEZE COLUMN TO GROUND SURFACE.
3. THE DIAMETER OF THE MAIN BORE SHALL BE A MINIMUM OF 9".
4. VENT PIPE TO BE CONTINUOUS 1" ø PVC PIPE WITH ONLY THE PORTION WITHIN THE ACTIVE GROUNDBED TO BE PERFORATED.

PRELIMINARY DRAFT FERC APPLICATION NOT FOR CONSTRUCTION

Appendix 1E CC-02

Alaska Pipeline Project

Cathodic Protection – Typical Deep Vertical Anode Bed

Rev. C

MATERIAL LIST

No.	DESCRIPTION	QTY
1	2" x 60" SiFeCr. ANODES	TO SUIT
2	#8 HMWPE (BLACK) ANODE LEADS	TO SUIT
3	55 lb BAGS OF CALCINED PETROLEUM COKE BREEZE	TO SUIT
4	4.5" WEEPING TILE	TO SUIT
5	4.5" CAP FOR WEEPING TILE	2
6	4.5" x 4.5" x 5' TREATED CEDAR POST	1
7	B2 WIRING PEDESTAL	1

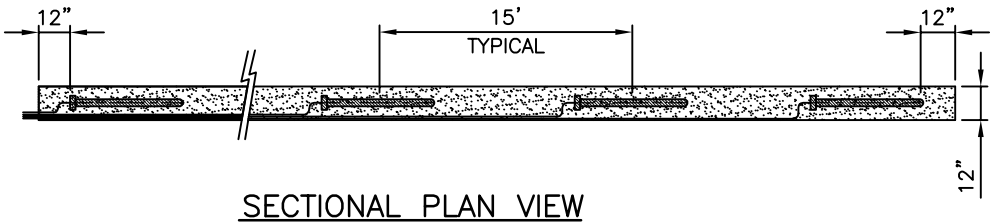

SECTIONAL PLAN VIEW

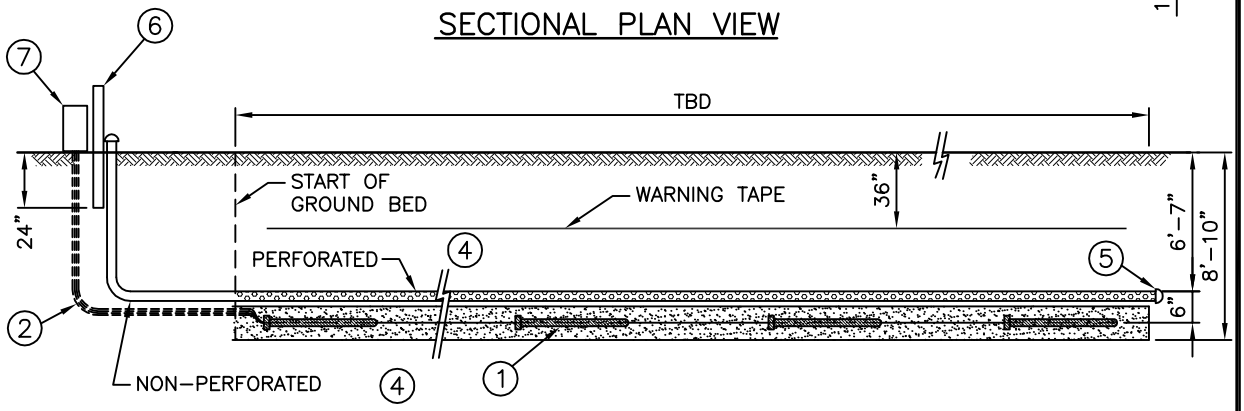

SECTIONAL ELEVATION VIEW

GENERAL INSTALLATION PROCEDURE:

1. EXCAVATE A TRENCH.
2. POUR A 4" BED OF COKE BREEZE EVENLY ALONG THE TRENCH AND TAMP TO COMPACT.
3. PLACE ANODES AT THE NOTED SPACING IN THE CENTRE OF THE COKE BREEZE BED.
4. POUR COKE BREEZE BACKFILL OVER THE ANODES TO ACHIEVE A TRENCH COVER 4" ABOVE THE ANODES AND TAMP TO COMPACT.
5. PLACE THE WEEPING TILE SYSTEM IN THE TRENCH ABOVE THE COKE BREEZE.
6. BACKFILL TO 36" BELOW GRADE BY USING NATIVE BACKFILL, FREE OF LARGE ROCKS OR FROZEN CLODS AND TAMP TO COMPACT EVERY 12" LIFT.
7. LAY WARNING TAPE AS SHOWN.
8. BACKFILL AND TAMP TO EVEN GRADE.

PRELIMINARY DRAFT FERC APPLICATION
NOT FOR CONSTRUCTION

Appendix 1E CC-03

Alaska Pipeline Project

Cathodic Protection – Typical Horizontal Anode Bed

Rev. C

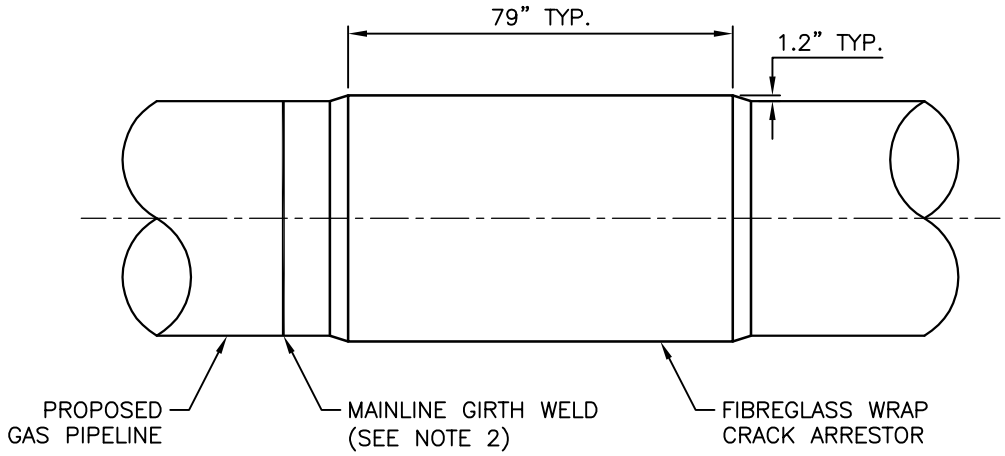

NOTES:

1. FIBREGLASS WRAP CRACK ARRESTORS INSTALLED ON TOP OF EXTERNAL COATING AT THE COATING MILL OR OTHER SUITABLE LOCATIONS.
2. CRACK ARRESTORS SHALL BE INSTALLED AT PIPE ENDS WITH SUFFICIENT CLEARANCE NOT TO INTERFERE WITH THE WELDING OR NDE PROCESS.
3. CRACK ARRESTORS TO BE INSTALLED AT NOMINAL TBD INTERVALS.

PRELIMINARY DRAFT FERC APPLICATION
NOT FOR CONSTRUCTION

Appendix 1E FC–01

Alaska Pipeline Project

Fracture Control – Typical Fracture Control Method

Rev. C

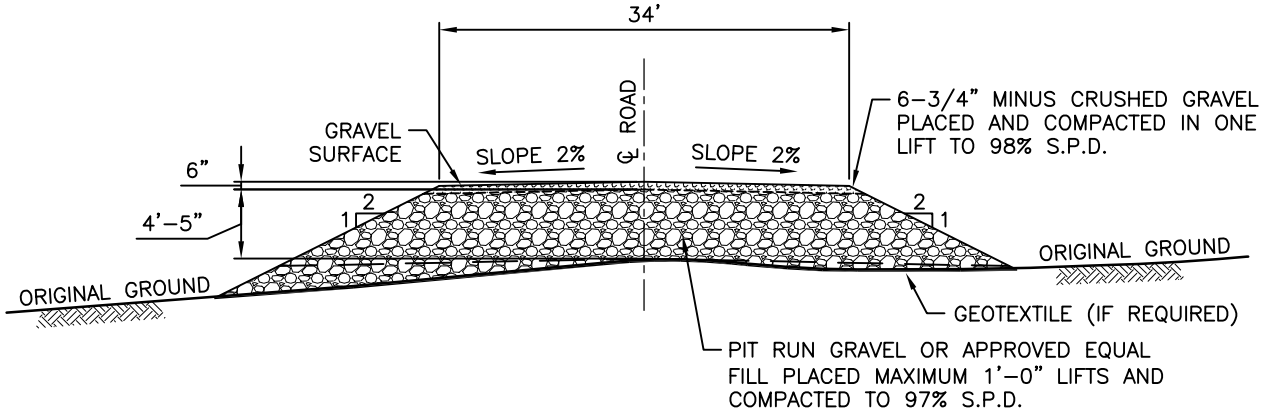

TYPICAL CROSS – SECTION ALL WEATHER ROAD FOR PERMAFROST AREA

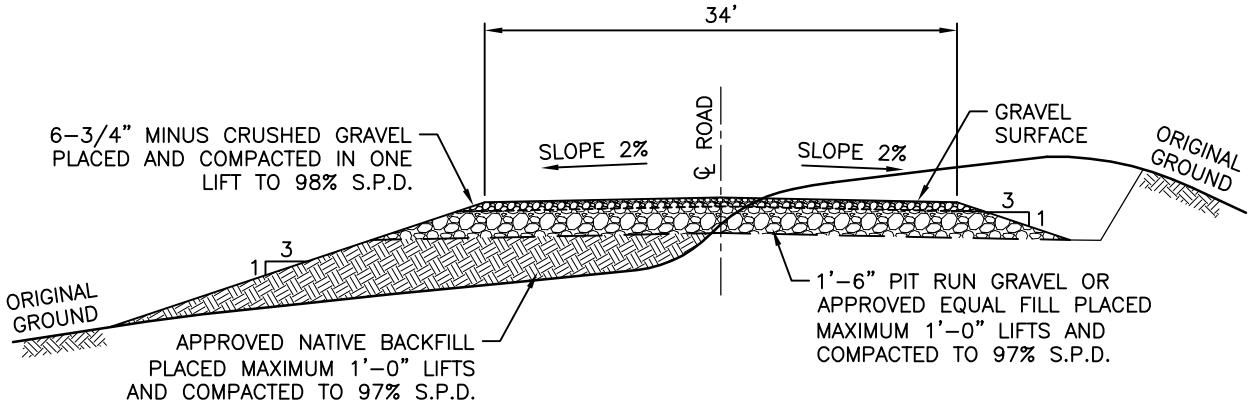

TYPICAL CROSS–SECTION ALL WEATHER ROAD FOR NON–PERMAFROST AREA

DESIGN STANDARDS
CLASS III ALL WEATHER ROAD

1. MAXIMUM GRADE : SUSTAINED – 6%
   PITCH – 8%
2. MAXIMUM RIGHT–OF–WAY WIDTH TBD.
3. TYPICAL SUBGRADE HEIGHT ON PERMAFROST : 5', NON PERMAFROST : 2'.
4. DESIGN SPEED TBD.

PRELIMINARY DRAFT FERC APPLICATION
NOT FOR CONSTRUCTION

Appendix 1E ACC–01
Alaska Pipeline Project

Access Roads – Typical Permanent Road Sections

Rev. C

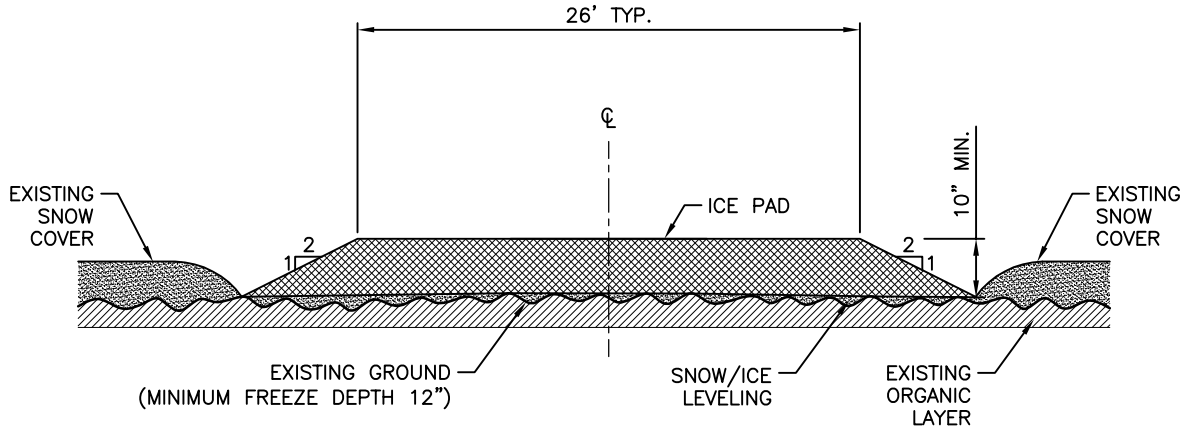

SECTION

NOTE:

1. SNOW/ICE ROADS ARE ONLY SUITABLE FOR USE DURING WINTER CONDITIONS. TRAVEL WILL BE RESTRICTED DURING CERTAIN DATES (TBD).

PRELIMINARY DRAFT FERC APPLICATION
NOT FOR CONSTRUCTION

Appendix 1E ACC–03

Alaska Pipeline Project

Access Roads – Typical Temporary Snow/Ice Road Section

Rev. C

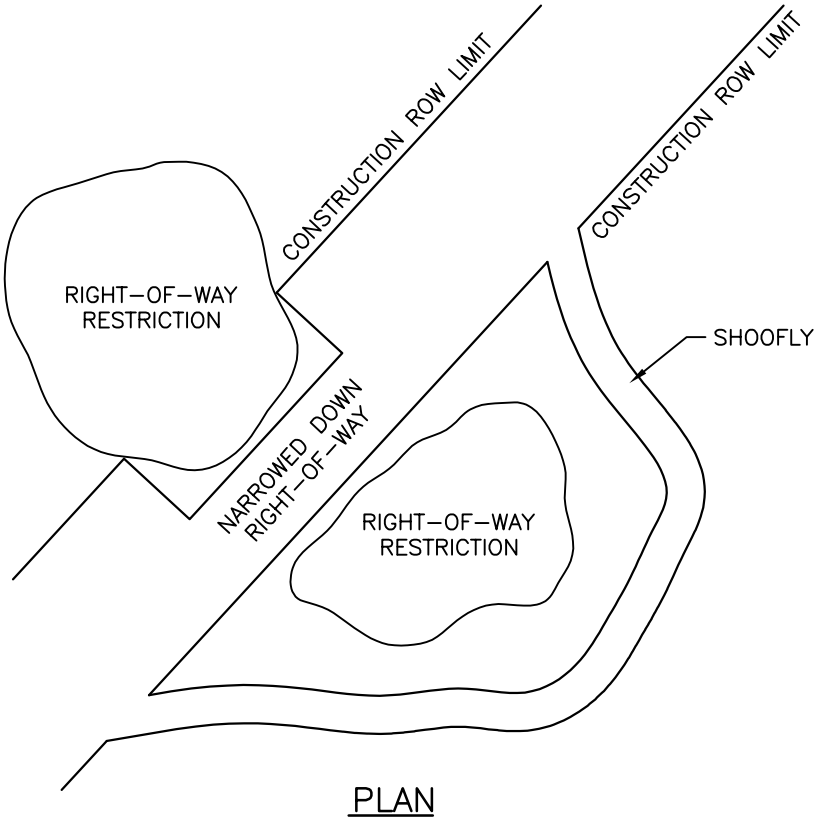

PLAN

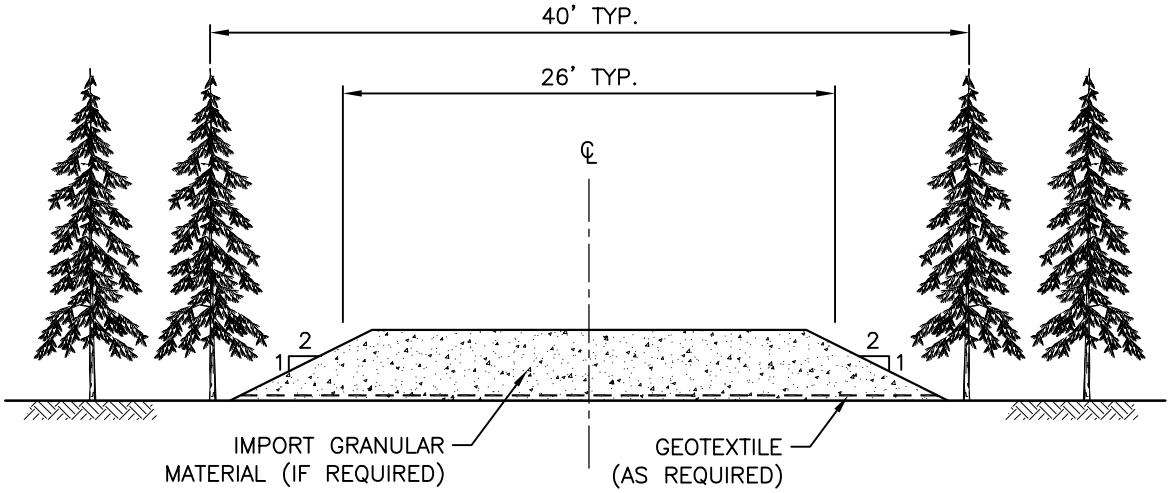

SECTION

PRELIMINARY DRAFT FERC APPLICATION
NOT FOR CONSTRUCTION

Appendix 1E ACC–05

Alaska Pipeline Project

Access Roads – Typical Temporary Shoofly Road Plan/Section

Rev. C

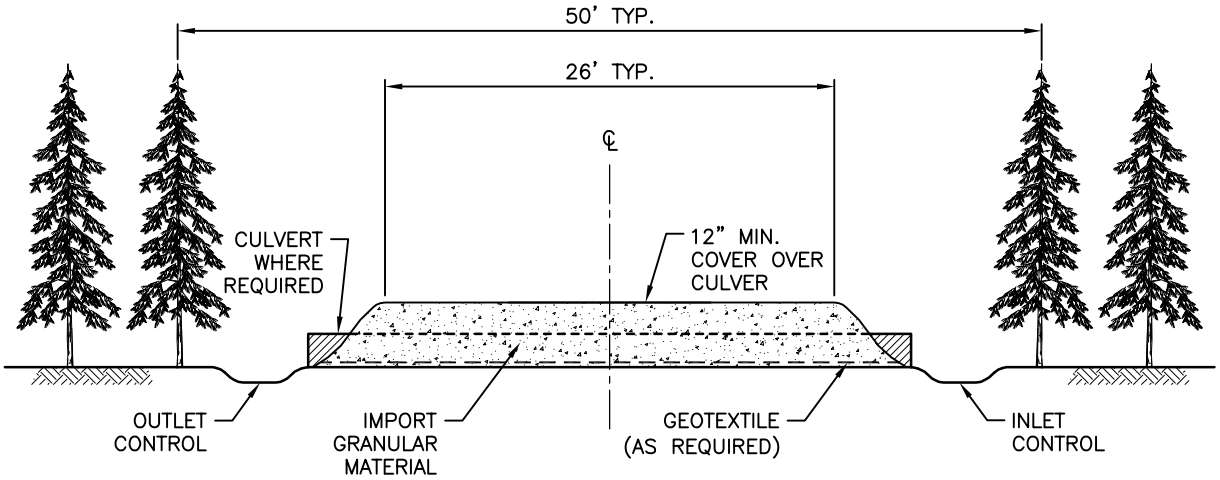

SECTION

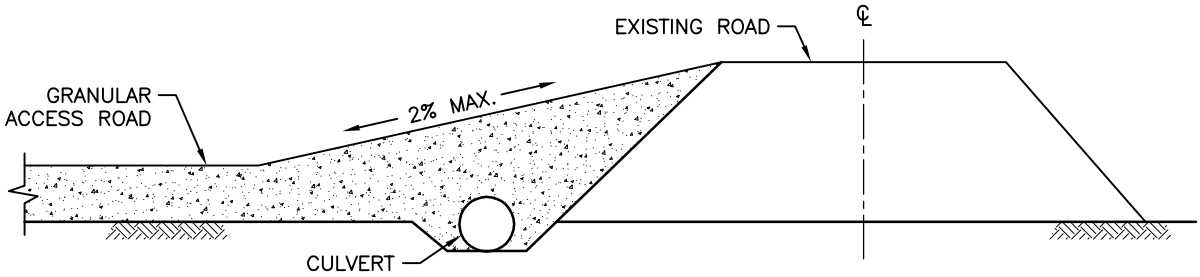

PROFILE – EXISTING ROAD RAMP

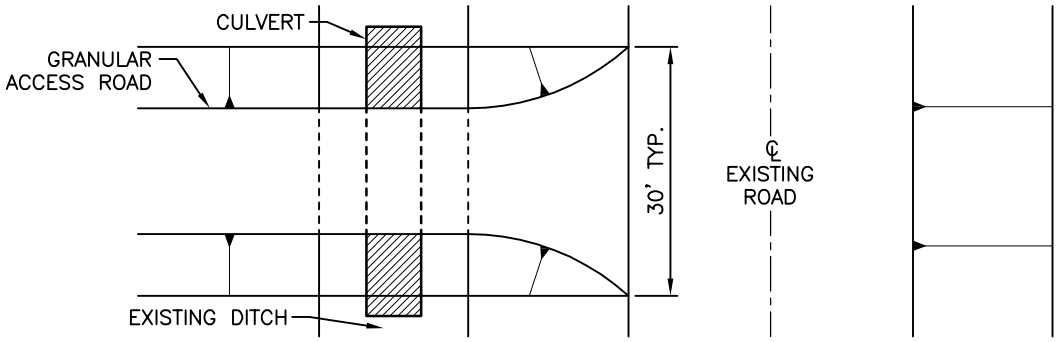

PLAN – EXISTING ROAD PLAN

PRELIMINARY DRAFT FERC APPLICATION
NOT FOR CONSTRUCTION

Appendix 1E ACC–06

Alaska Pipeline Project

Access Roads – Typical Temporary Granular Road Off Highway

Rev. C

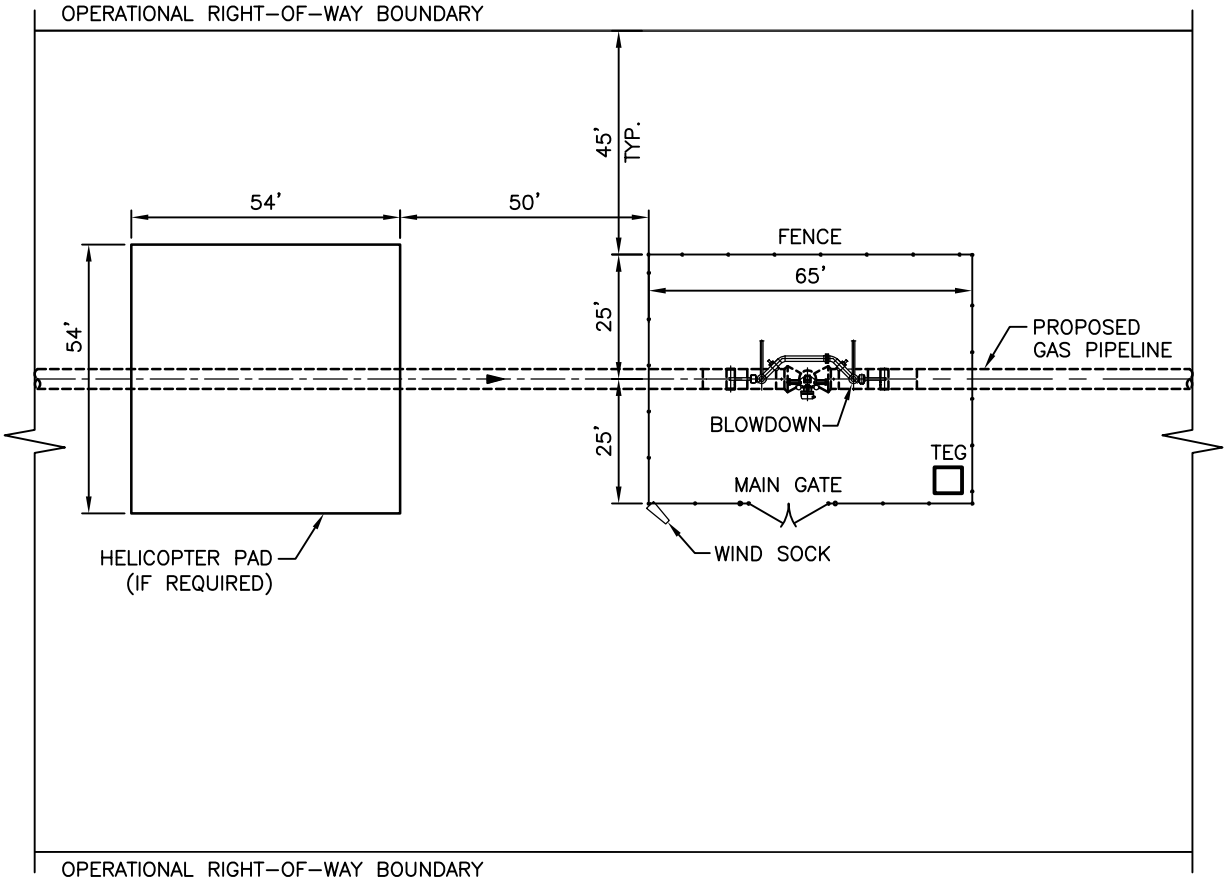

PLAN

NOTES:

1. A HELICOPTER PAD WILL BE PROVIDED FOR REMOTE BLOCK VALVE LOCATIONS WITH NO ACCESS.
2. TEG UNIT WILL BE PROVIDED FOR CATHODIC PROTECTION WHERE CONVENTIONAL POWER IS NOT AVAILABLE.

PRELIMINARY DRAFT FERC APPLICATION
NOT FOR CONSTRUCTION

Appendix 1E FAC–05

Alaska Pipeline Project

Pipeline Facilities – Typical Mainline Block Valve Plot Plan

Rev. C

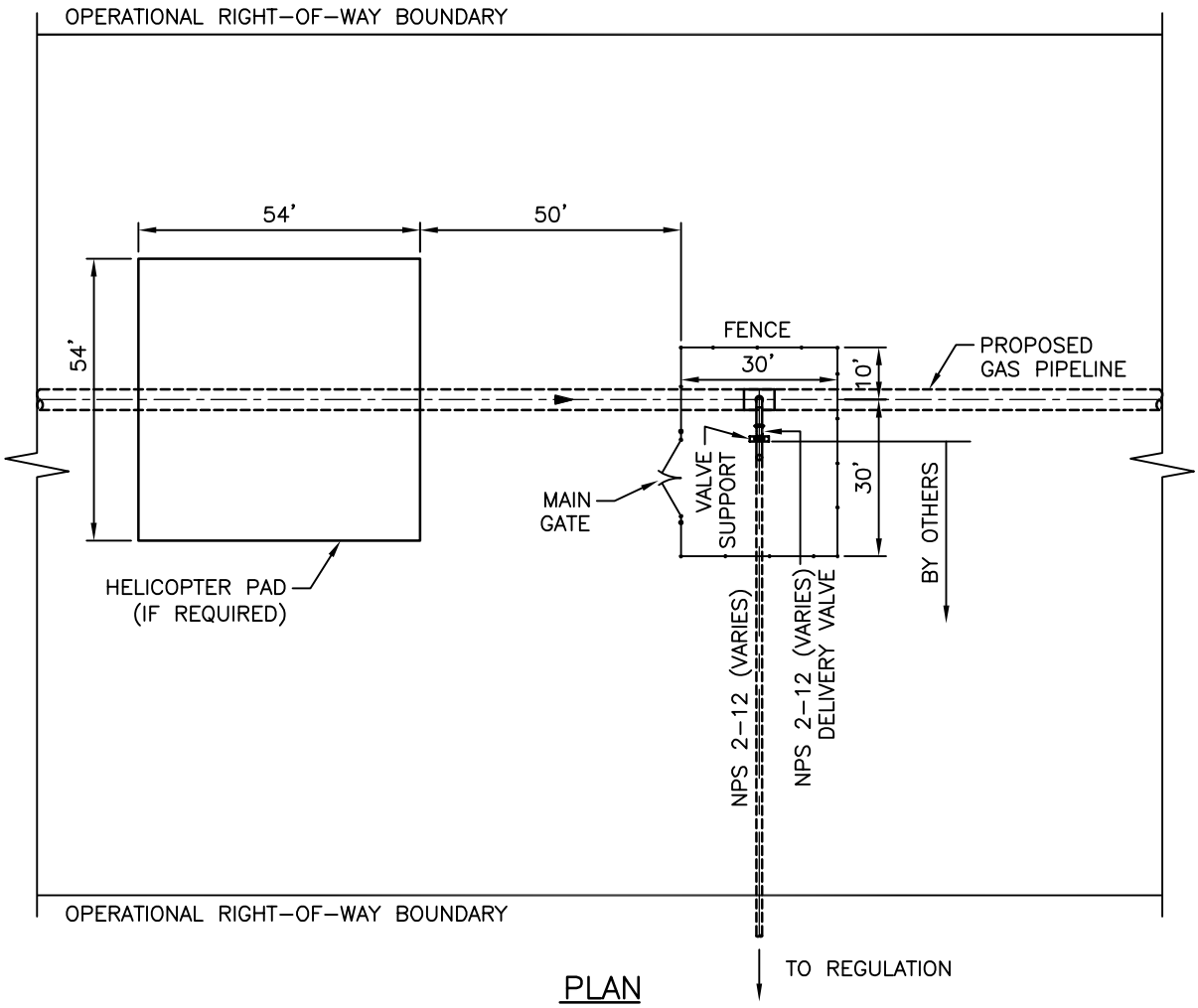

PLAN

NOTE:

1. A HELICOPTER PAD WILL BE PROVIDED FOR REMOTE DELIVERY POINT TAKE–OFFS WITH NO ACCESS.

PRELIMINARY DRAFT FERC APPLICATION
NOT FOR CONSTRUCTION

Appendix 1E FAC–08A

Alaska Pipeline Project

Pipeline Facilities – Typical Delivery Point Take–Off Plot Plan

Rev. C

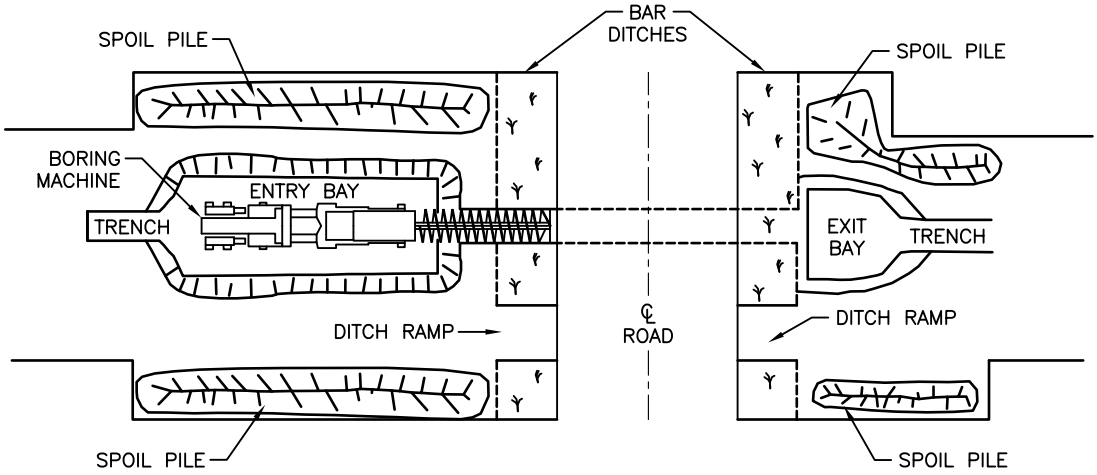

PLAN VIEW

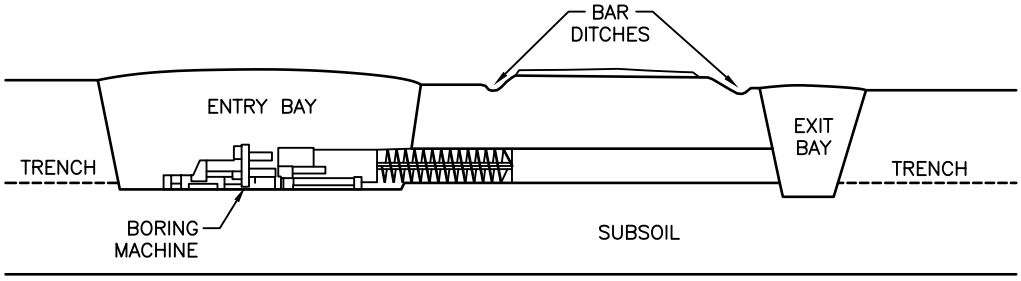

PROFILE

NOTES:

1. ACQUIRE AND MARK ADDITIONAL TEMPORARY WORKSPACE.
2. EXCAVATE ENTRY AND EXIT BAYS.
3. AFTER COMPLETION OF PIPE TIE–INS, BACKFILL AND COMPACT IN LIFTS TO MINIMIZE SUBSIDENCE AND THE NEED FOR A CROWN OVER THE EXCAVATION.
4. REMOVE DITCH RAMPS.
5. FOR UNSTABLE SOIL, PROVIDE SHORING AS REQUIRED.

PRELIMINARY DRAFT FERC APPLICATION NOT FOR CONSTRUCTION

Appendix 1E CONST–02

Alaska Pipeline Project

Construction Typicals – Horizontal Boring/Drilling Roads

Rev. D

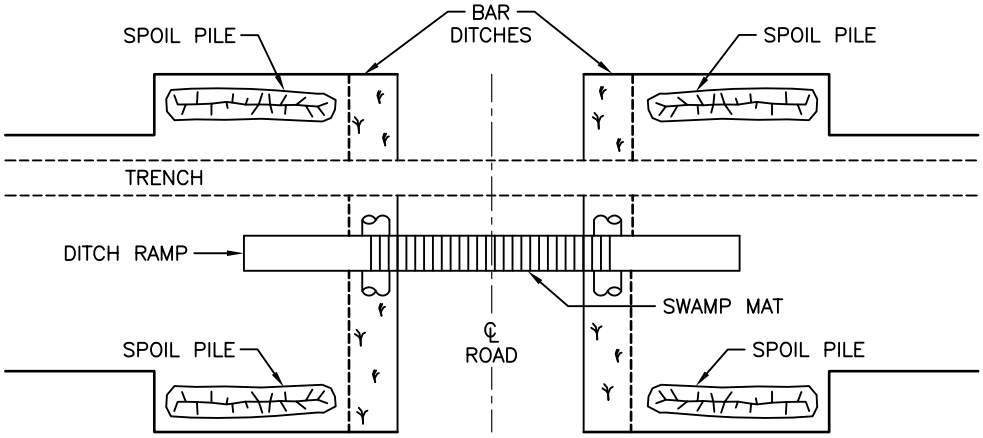

PLAN VIEW

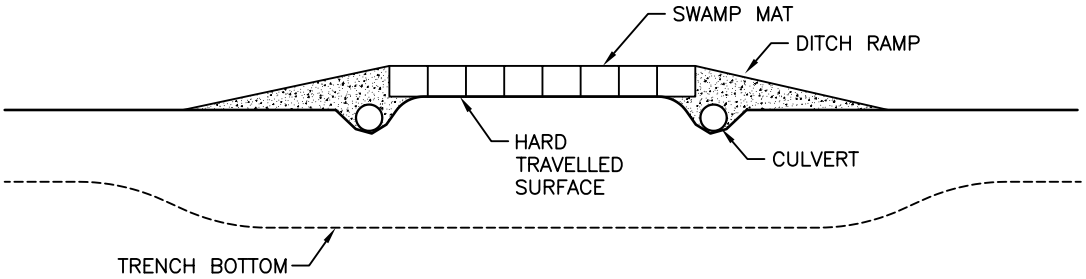

PROFILE

NOTES:

1. SWAMP MATS MAY BE REQIRED ACROSS ROAD TO PROTECT HARD TRAVELLED SURFACE FROM EQUIPMENT, DURING INSTALLATION.
2. OPEN–CUT ROAD CROSSING TO BE CARRIED OUT AS QUICKLY AS POSSIBLE.
3. PROPER SIGNAGE AND ROAD CLOSURE REQUIRED BEFORE COMMENCING TRENCHING.
4. TRENCH SPOIL TO BE REPLACED IN 6" LIFTS AND COMPACTED TO 95% OF THE MAXIMUM PROCTOR DRY DENSITY.
5. ORIGINAL HARD TRAVELLED SURFACE TO BE RESTORED TO ORIGINAL CONDITION FOLLOWING COMPLETION OF CROSSING INSTALLATION.

PRELIMINARY DRAFT FERC APPLICATION
NOT FOR CONSTRUCTION

Appendix 1E CONST–03

Alaska Pipeline Project

Construction Typicals – Open–Cut Roads

Rev. D

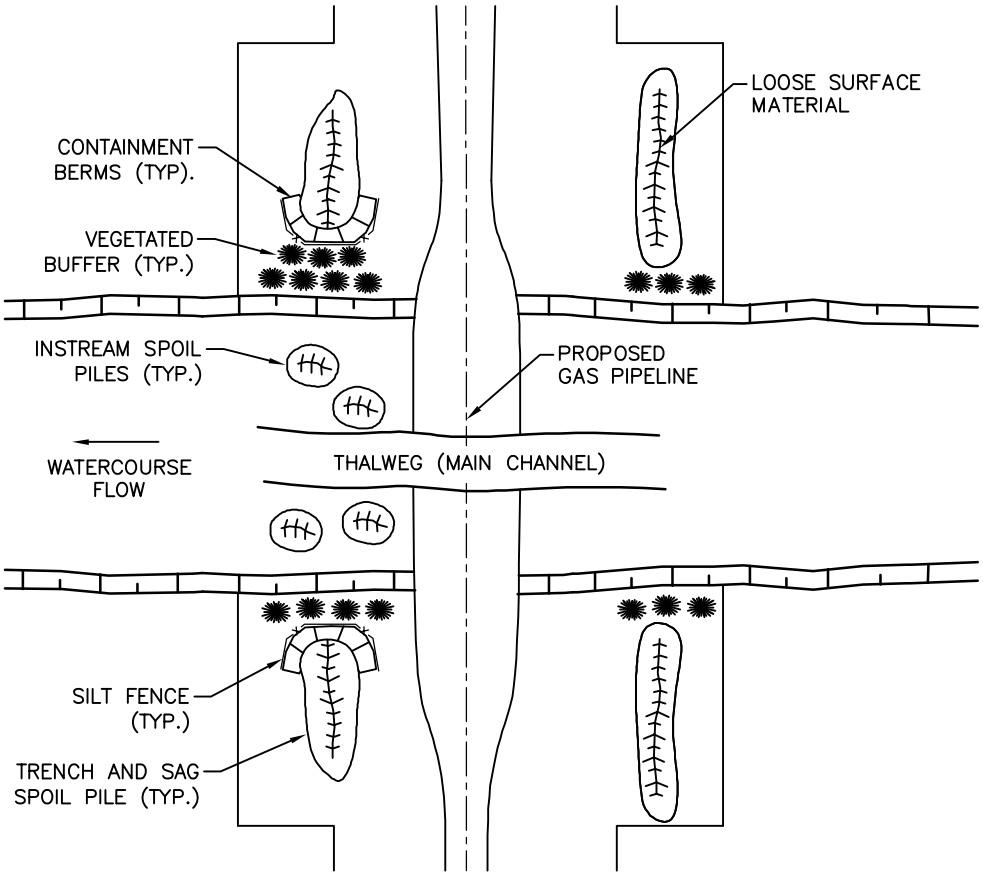

PLAN VIEW

NOTES:

1. CLEAR VEGETATION FROM EXCAVATION AND MATERIALS STORAGE AREAS, LEAVING A VEGETATED BUFFER BACK FROM THE BANK ON THE STORAGE AND WORK SIDES OF THE ROW. CLEAR VEGETATION FROM THE WORK SIDE ONLY IF A VEHICLE CROSSING IS REQUIRED.
2. GRUB ROOTS, AND SALVAGE LOOSE SURFACE MATERIAL FROM GRADED AND EXCAVATED AREAS AND STORE SEPARATELY OUT OF THE WAY OF CROSSING ACTIVITIES.
3. CONSTRUCT SPOIL CONTAINMENT BERMS AND INSTALL SEDIMENT CONTROL FEATURES (e.g. SILT FENCE, STRAW BALES) DOWNSLOPE OF PROPOSED SPOIL STORAGE AREAS.
4. THE INSTREAM PIPE SECTION SHALL BE CONSTRUCTED AND TESTED PRIOR TO INSTREAM ACTIVITY.
5. ANY EQUIPMENT WORKING INSTREAM MUST BE CLEAN, IN GOOD WORKING CONDITION AND CONTAIN ENVIRONMENTALLY FRIENDLY HYDRAULIC AND LUBRICATING FLUIDS.
6. EXCAVATE BELLHOLE THROUGH WATERCOURSE AND STOCKPILE SPOIL INSTREAM, IN DISCRETE PILES ADJACENT TO THE EXCAVATION DOWNSTREAM OF THE CROSSING. SPOIL SHOULD NOT BE STOCKPILED IN THE MAIN CHANNEL (THALWEG). THE INSTREAM SPOIL PILES MUST NOT BLOCK MORE THAN 2/3 OF THE CHANNEL WIDTH.
7. EXCAVATE SAGS ON BOTH SIDES OF WATERCOURSE AND STOCKPILE WET SPOIL BEHIND THE SPOIL CONTAINMENT BERMS. INSTALL PIPE SECTION, BACKFILL EXCAVATION AND RE-ESTABLISH WATERCOURSE BED AND BANKS.

PRELIMINARY DRAFT FERC APPLICATION
NOT FOR CONSTRUCTION

Appendix 1E CONST-04

Alaska Pipeline Project

Construction Typicals - Waterbodies - Major/Intermediate Open-Cut

Rev. E

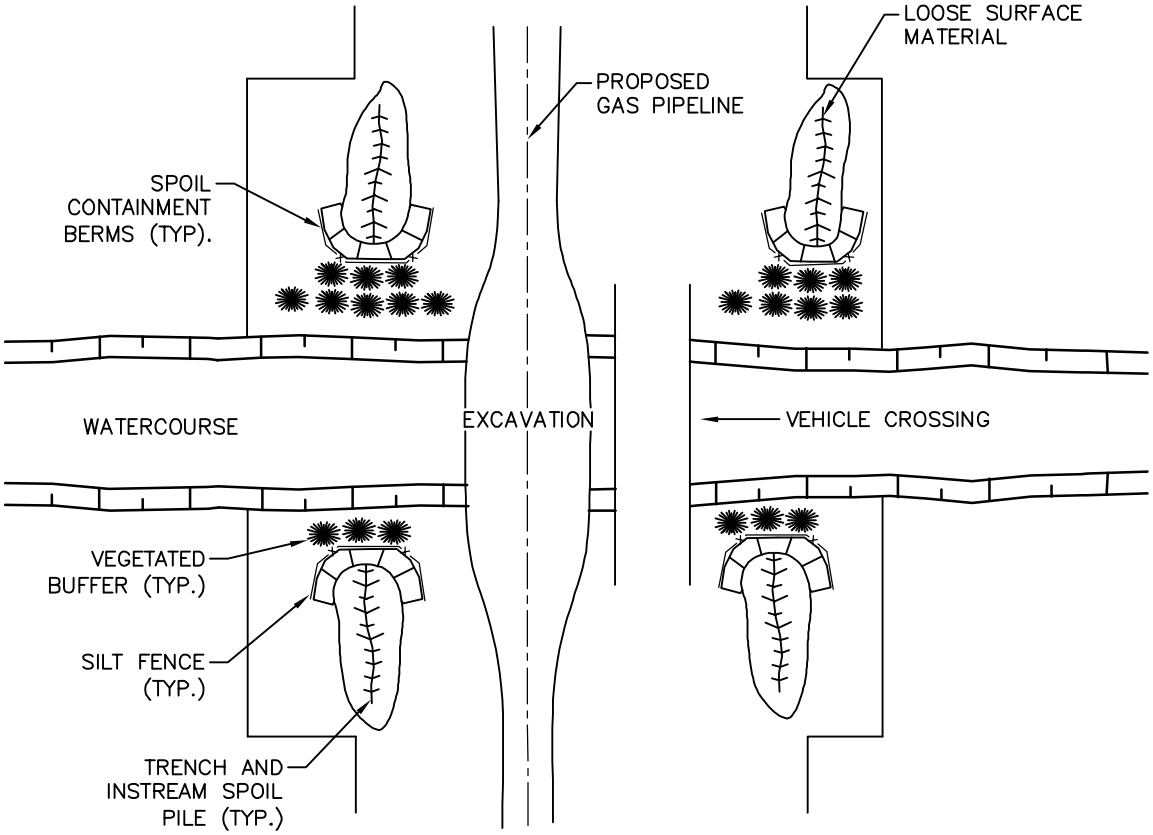

PLAN VIEW

NOTES:

1. CLEAR VEGETATION FROM WORK SPACE AND MATERIAL STORAGE AREAS, LEAVING A VEGETATED BUFFER BACK FROM THE BANK ON THE STORAGE SIDE OF THE ROW.
2. GRUB ROOTS, SALVAGE LOOSE SURFACE MATERIAL FROM GRADED AND EXCAVATED AREAS AND STORE THEM SEPARATELY OUT OF THE WAY OF CROSSING ACTIVITIES.
3. CONSTRUCT SPOIL CONTAINMENT BERMS AND INSTALL SEDIMENT CONTROL FEATURE (e.g. SILT FENCE, STRAW BALES) DOWNSLOPE OF PROPOSED SPOIL STORAGE AREAS.
4. THE INSTREAM PIPE SECTION SHALL BE CONSTRUCTED AND TESTED PRIOR TO INSTREAM ACTIVITY.
5. TO REDUCE THE NEED FOR EQUIPMENT WORKING INSTREAM, LOCATE BACKHOES ON BOTH BANKS OF THE WATERCOURSE DURING EXCAVATION.
6. EXCAVATE THE CROSSING AND STORE WET SPOIL BEHIND THE SPOIL CONTAINMENT BERMS. INSTALL PIPE SECTION, BACKFILL EXCAVATION AND RE-ESTABLISH WATERCOURSE BED AND BANKS.

PRELIMINARY DRAFT FERC APPLICATION
NOT FOR CONSTRUCTION

Appendix 1E CONST-05

Alaska Pipeline Project

Construction Typicals – Waterbodies – Minor Open-Cut

Rev. E

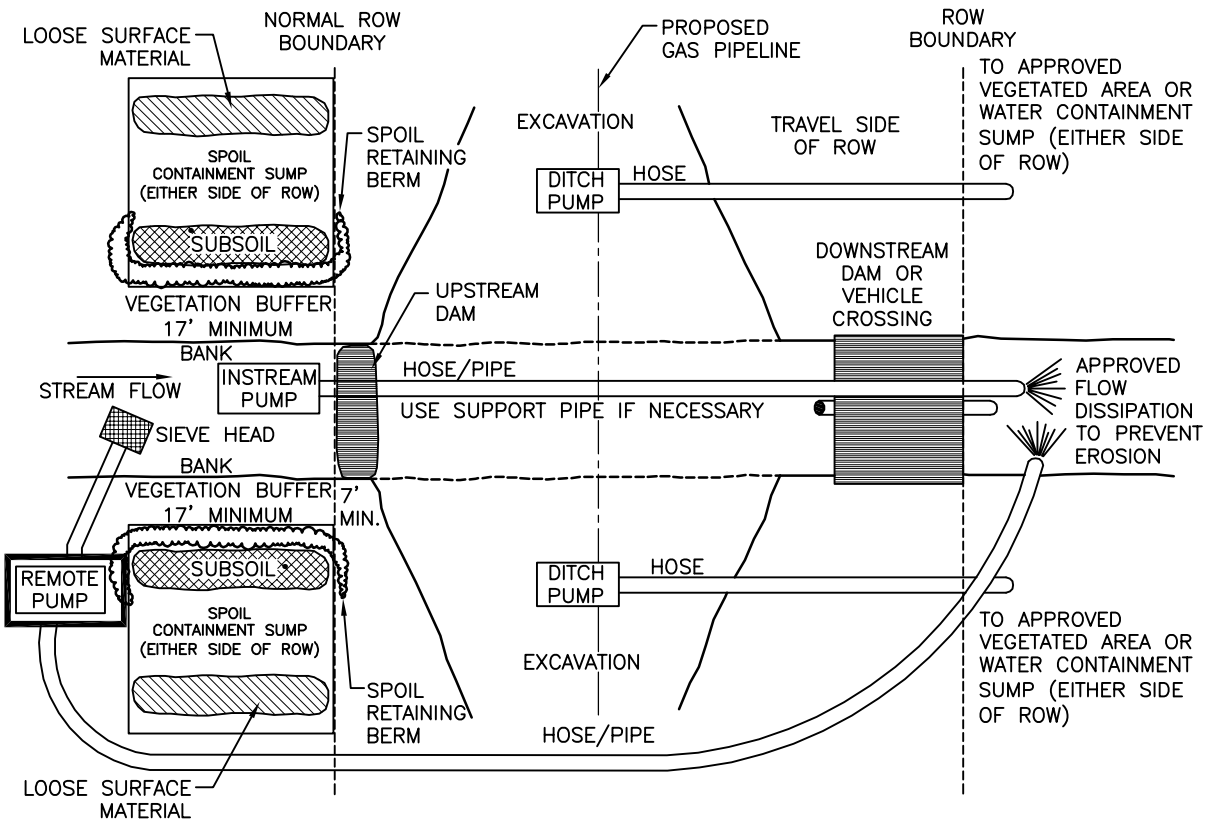

DAM AND PUMP BY INSTREAM PUMPING ACROSS EXCAVATION OR BY REMOTE PUMPING AROUND EXCAVATION

NOTES:

1. INSTALL THE VEHICLE CROSSING ON THE WORK SIDE EDGE OF THE ROW TO ALLOW FOR A WIDE EXCAVATION.
2. STOCKPILE ALL REQUIRED MATERIALS AND EQUIPMENT ON THE SITE PRIOR TO BEGINNING INSTREAM WORK.
3. PERFORM THE BANK GRADE AND PREPARE SPOIL CONTAINMENT SUMPS AS CIRCUMSTANCES DICTATE.
4. COMPLETE WELDING, COATING, AND WEIGHTING OF THE RIVER PIPE SECTION.
5. BEGIN THE OPERATION IN THE EARLY MORNING TO ALLOW FOR SAME DAY INSTALLATION IF POSSIBLE.
6. INSTALL PUMPS AND CHECK OPERATION TO EQUALIZE FLOW.
7. CONSTRUCT THE SPOIL SIDE DAM USING SPECIFIED DAMMING TECHNIQUES. DAM SHOULD BE CONSTRUCTED ON THE SPOIL SIDE EDGE OF THE ROW TO ALLOW FOR A WIDE EXCAVATION.
8. PLUG THE VEHICLE CROSSING CULVERT OR CONSTRUCT THE DOWNSTREAM DAM USING SPECIFIED DAMMING TECHNIQUES. WHERE A BRIDGE IS USED THE DAM SHOULD BE CONSTRUCTED AS CLOSE TO THE SPOIL SIDE OF THE BRIDGE AS POSSIBLE TO ALLOW FOR A WIDE EXCAVATION.
9. EXCAVATE TRENCH AS RAPIDLY AS POSSIBLE AND INSTALL PIPE.
10. BACKFILL THE STREAM CHANNEL FIRST PUSHING THE SILTED WATER BACK INTO THE BANK EXCAVATIONS. PUMP OR DRAIN THE BANK EXCAVATIONS WHILE PROGRESSIVELY BACKFILLING FROM THE STREAM CHANNEL OUTWARD. CONSTRUCT WATER CONTAINMENT SUMPS IF NECESSARY.
11. RESTORE BED AND BANKS OF THE STREAM CHANNEL, REMOVE THE DOWNSTREAM DAM OR VEHICLE CROSSING PLUG, REMOVE UPSTREAM DAM OR VEHICLE CROSSING PLUG AND REMOVE BYPASS PUMPS.

PRELIMINARY DRAFT FERC APPLICATION
NOT FOR CONSTRUCTION

Appendix 1E CONST–06

Alaska Pipeline Project

Construction Typicals – Waterbodies – Isolated Open-Cut – Dam and Pump

Rev. E

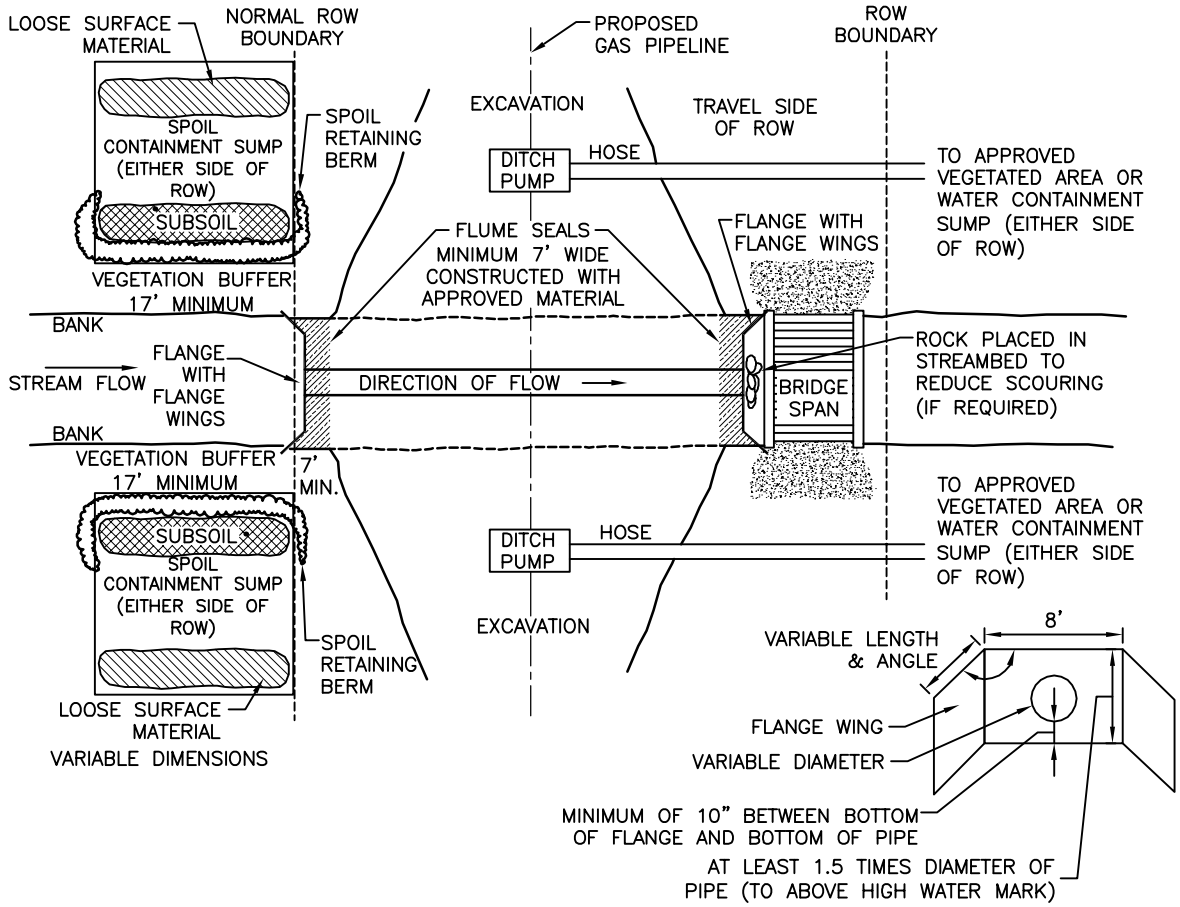

FRONT VIEW OF FLUME FACE (UPSTREAM)

NOTES:

1. INSTALL THE VEHICLE CROSSING ON THE WORK SIDE EDGE OF THE RoW TO ALLOW FOR A WIDE EXCAVATION.
2. GRADE THE BANKS OF THE WATER CROSSING AND PREPARE THE SPOIL CONTAINMENT AREAS.
3. CONSTRUCT THE FLUME WITH CORRECT FLANGES AND FLANGE WINGS, AS PER THE SPECIFICATIONS.
4. STOCKPILE ALL REQUIRED MATERIALS PRIOR TO BEGINNING INSTREAM WORK.
5. COMPLETE CONSTRUCTION OF PIPE SECTION.
6. INSTALL THE FLUME IN THE STREAM CHANNEL USING SEALING TECHNIQUES. DEWATER THE AREA BETWEEN THE FLANGE WINGS.
7. BEGINNING IN THE EARLY MORNING, EXCAVATE THE TRENCH AS QUICKLY AS POSSIBLE PLACING SPOIL OUT OF THE STREAM CHANNEL. CREATE SPOIL CONTAINMENT SUMPS IF NECESSARY TO KEEP SPOIL FROM FLOWING BACK INTO THE STREAM CHANNEL.
8. PUMP EXCAVATION AS REQUIRED TO PREVENT DOWNSTREAM FLOW OF SILTED WATER. DIRECT THE PUMPED WATER INTO VEGETATED AREAS WELL BACK FROM THE WATER COURSE. CONSTRUCT WATER CONTAINMENT SUMPS.
9. INSTALL PIPE.
10. BACKFILL THE STREAM CHANNEL FIRST, SQUEEZING THE SILTED WATER INTO THE BANK EXCAVATIONS. PUMP OR DRAIN THE BANK EXCAVATIONS WHILE PROGRESSIVELY BACKFILLING FROM THE STREAM CHANNEL OUTWARD AND COMPLETE BACKFILL.
11. RE-ESTABLISH THE BED AND BANKS OF THE STREAM CHANNEL, REMOVE THE DOWNSTREAM SEAL MATERIALS, REMOVE UPSTREAM SEAL MATERIALS AND REMOVE THE FLUME.

PRELIMINARY DRAFT FERC APPLICATION
NOT FOR CONSTRUCTION

Appendix 1E CONST-07

Alaska Pipeline Project

Construction Typicals - Waterbodies - Isolated Open-Cut - Dam and Flume

Rev. E

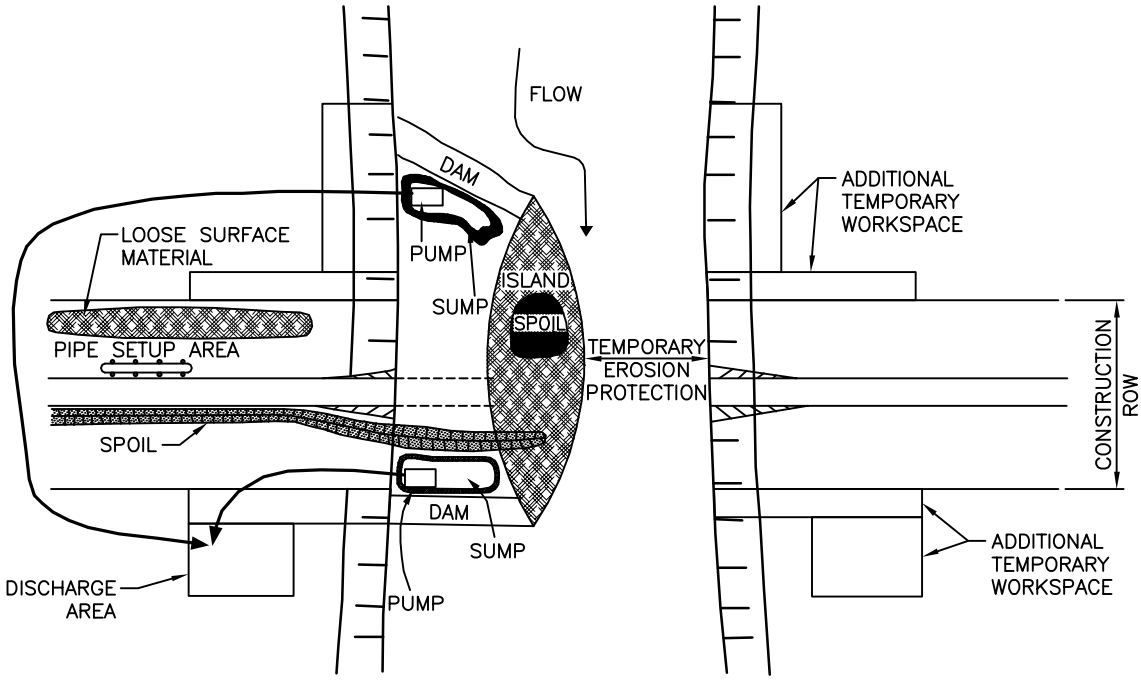

PLAN VIEW

NOTES:

1. IF THERE IS A HIGH VELOCITY STREAMFLOW, INSTALL DEFLECTION BARRIER (e.g., MEDIAN BARRIERS) TO PERMIT CONSTRUCTION OF DAM OUTSIDE FULL STREAMFLOW.
2. CONSTRUCT DAM FROM LOCAL MATERIALS, SANDBAGS, AQUADAMS, SHEET PILING, MEDIAN BARRIERS, GRAVEL OR OTHER APPROPRIATE MATERIAL TO EXTEND OVER HALFWAY ACROSS THE WATERCOURSE.
3. INSTALL IMPERMEABLE BARRIER WITHIN DAM.
4. INSTALL RIPRAP ON UPSTREAM SIDE TO PROTECT THE DAM FROM EROSION IF DAM IS CONSTRUCTED OF LOOSE MATERIAL.
5. SPOIL STORAGE SHALL BE ABOVE THE HIGH WATER MARK OR PROTECTED BY EROSION CONTROL MEASURES TO ENSURE THAT, WHEN THE WATER LEVEL RISES AFTER ALL FLOW HAS BEEN CHANNELIZED INTO ONE CHANNEL, SPOIL IS NOT WASHED AWAY.
6. INSTALL SUMPS TO COLLECT SEEPAGE AND THEN PUMP TO DEWATERING AREA.
7. ENSURE DISCHARGE AREA CAN HANDLE THE VOLUME OF WATER AND SILT PUMPED TO SHORE.
8. COMPLETE TRENCHING, LOWERING IN AND BACKFILLING.
9. REMOVE DAM, RECONSTRUCT BANK.
10. REPEAT PROCESS FOR OTHER CHANNEL.
11. TEMPORARY DIVERSION ALSO MAY BE MADE THROUGH ABANDONED CHANNELS AS LONG AS STEPS ARE TAKEN TO MINIMIZE A FLUSH OF SEDIMENT ONCE THE WATERCOURSE IS REDIRECTED THROUGH THE "NEW" CHANNEL.
12. TEMPORARY DIVERSION THROUGH A CHANNEL EXCAVATED INTO A FLOOD PLAIN IS POSSIBLE IF LINED OR PASSED THROUGH A FLEXIBLE CONDUIT TO PREVENT EXCESSIVE EROSION ALONG THE "NEW" CHANNEL.

PRELIMINARY DRAFT FERC APPLICATION
NOT FOR CONSTRUCTION

Appendix 1E CONST–08

Alaska Pipeline Project

Construction Typicals – Waterbodies – Isolated Open–Cut – Dam and Divert

Rev. E

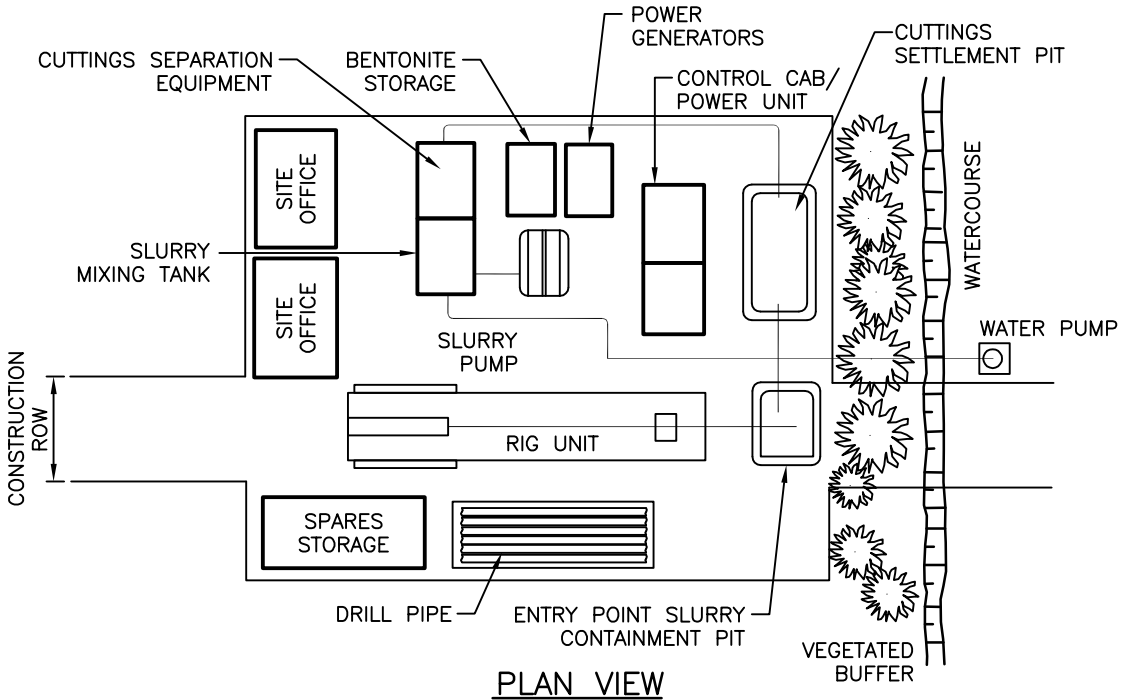

PLAN VIEW

TYPICAL ENTRY/RIG SIDE LAYOUT

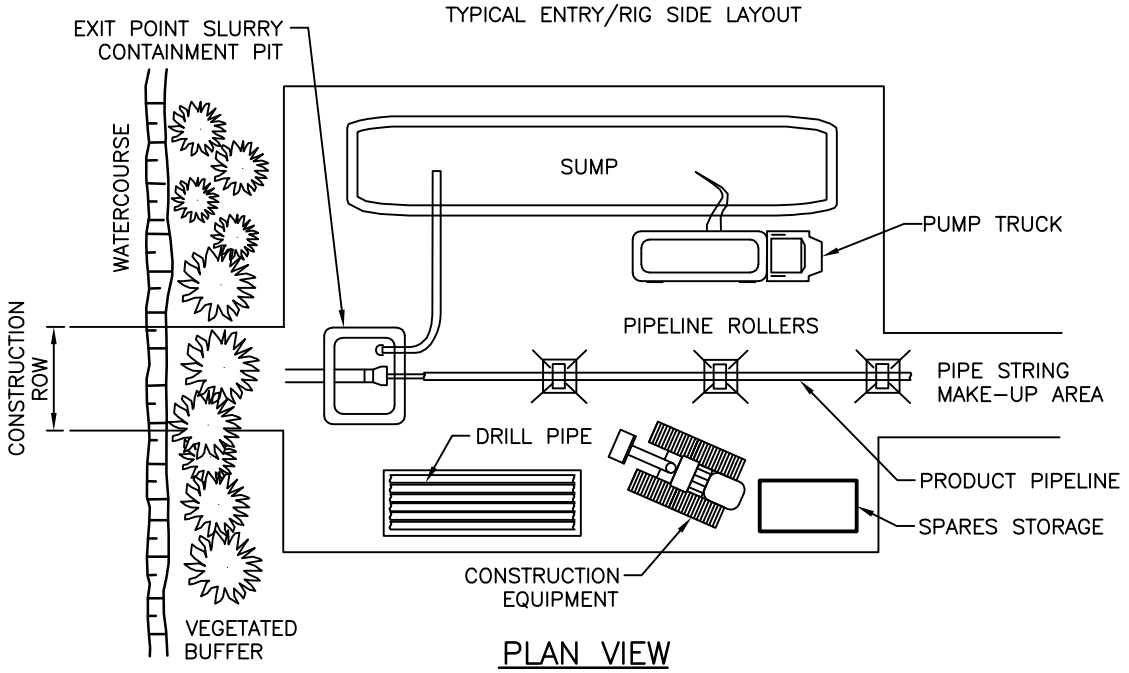

PLAN VIEW

TYPICAL EXIT/PIPE SIDE LAYOUT

PRELIMINARY DRAFT FERC APPLICATION
NOT FOR CONSTRUCTION

Appendix 1E CONST–09

Alaska Pipeline Project

Construction Typicals – Waterbodies – Horizontal Directional Drill

Rev. C

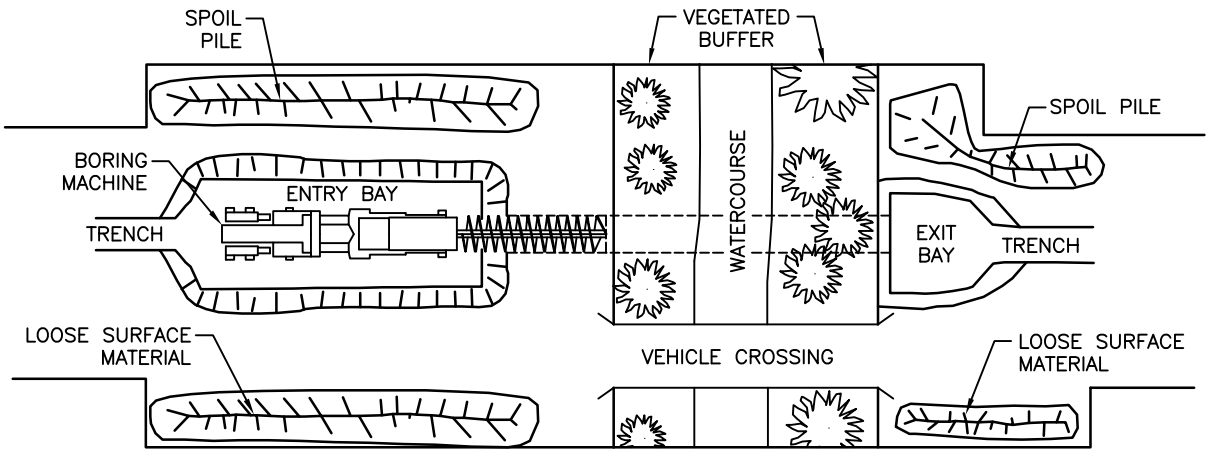

PLAN VIEW

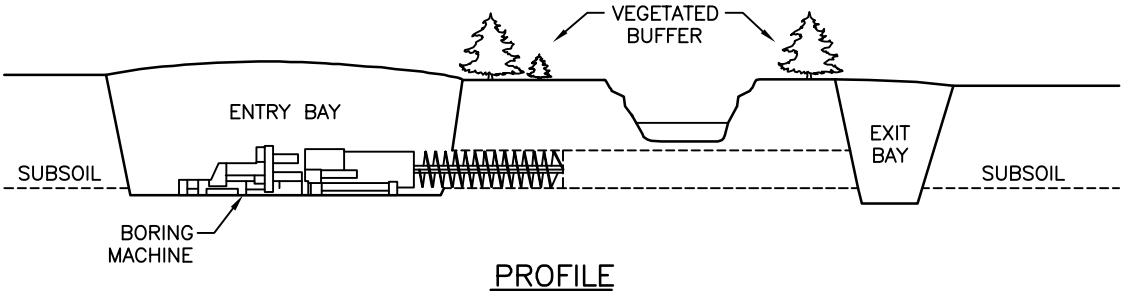

PROFILE

NOTES:

1. ACQUIRE AND MARK ADDITIONAL TEMPORARY WORKSPACE.
2. SET UP EQUIPMENT BACK FROM THE EDGE OF THE WATERCOURSE; DO NOT CLEAR WITHIN BUFFER ZONE EXCEPT ALONG THE WORK SIDE, IF TEMPORARY VEHICLE CROSSING IS INSTALLED.
3. EXCAVATE ENTRY AND EXIT BAYS. STORE SPOIL ON OPPOSITE SIDE OF LOOSE SURFACE MATERIAL OR ADJACENT TO TOPSOIL MAINTAINING ADEQUATE SEPARATION. FOR UNSTABLE SOIL, PROVIDE SHORING AS REQUIRED.
4. COMPLETE BORING AND TIE–IN TO MAINLINE.
5. PUMP BOTH BAYS DRY IF SEEPAGE BECOMES A PROBLEM. DEWATER ONTO STABLE, WELL VEGETATED LAND, AWAY FROM THE WATERCOURSE.
6. BACKFILL AND COMPACT IN LIFTS.

PRELIMINARY DRAFT FERC APPLICATION
NOT FOR CONSTRUCTION

Appendix 1E CONST–10

Alaska Pipeline Project

Construction Typicals – Waterbodies – Horizontal Bore

Rev. E

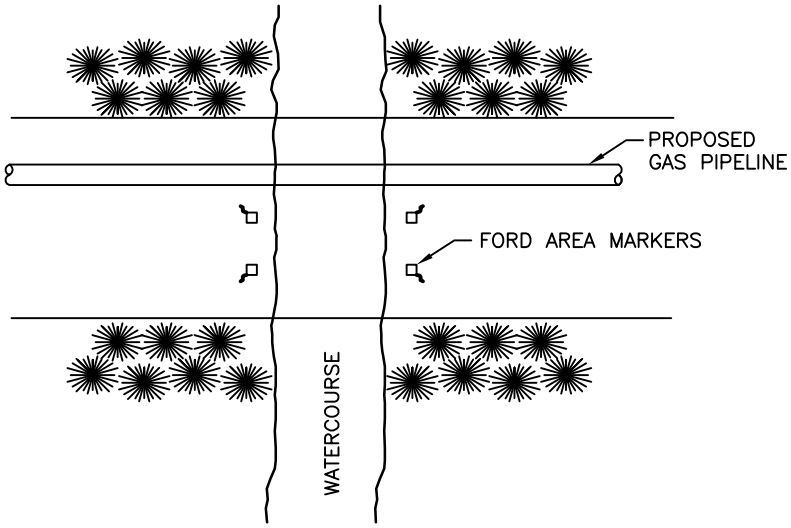

PLAN VIEW

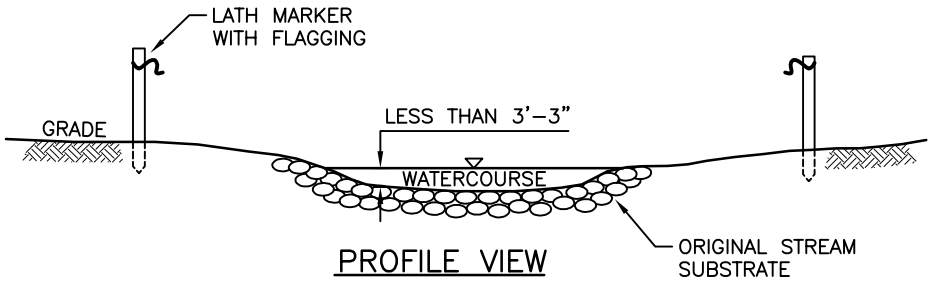

PROFILE VIEW

NOTES:

1. USE FORDS TO PROVIDE VEHICULAR ACCESS ACROSS RELATIVELY SHALLOW (LESS THAN 3'–3") AND NARROW WATERCOURSES WITH GRANULAR BEDS AND STABLE BANKS. WHERE WATER DEPTH, STREAMBED COMPOSITION OR BANK SLOPES COULD POSE TRAFFICABILITY PROBLEMS FOR RUBBER TIRED VEHICLES, LIMIT FORD TRAFFIC TO VEHICLES AND EQUIPMENT WITH TRACKS.
2. DO NOT USE FORD DURING FISH SPAWNING, INCUBATION OR MIGRATION PERIODS.
3. MINIMIZE GRADING IN PROXIMITY TO WATERCOURSE. GRADE AND GRUB ONLY ALONG THE TRENCHLINE AND AN AREA IMMEDIATELY ADJACENT TO THE TRENCHLINE. PULL DIRT AND DEBRIS AWAY FROM WATERCOURSE, IF BANKS REQUIRE SLOPING.
4. MINIMIZE USE OF FORD.
5. STABILIZE BANKS AND APPROACHES WITH GRANULAR BLANKET UNDERLAIN BY A GEOTEXTILE, IF WARRANTED.
6. MARK BOUNDARIES OF FORD ON BOTH SIDES OF CROSSING TO CONFINE ALL VEHICLE TRAFFIC TO FORD.
7. RESTORE AND STABILIZE BEDS AND BANKS TO ORIGINAL CONTOUR WHEN FORD IS NOT LONGER NEEDED. GRANULAR BLANKET NEED NOT BE REMOVED IF IT IS NOT A BARRIER TO FISH DURING LOW FLOW CONDITIONS.

PRELIMINARY DRAFT FERC APPLICATION
NOT FOR CONSTRUCTION

Appendix 1E CONST–11

Alaska Pipeline Project

Construction Typicals – Equipment Crossing – Ford

Rev. C

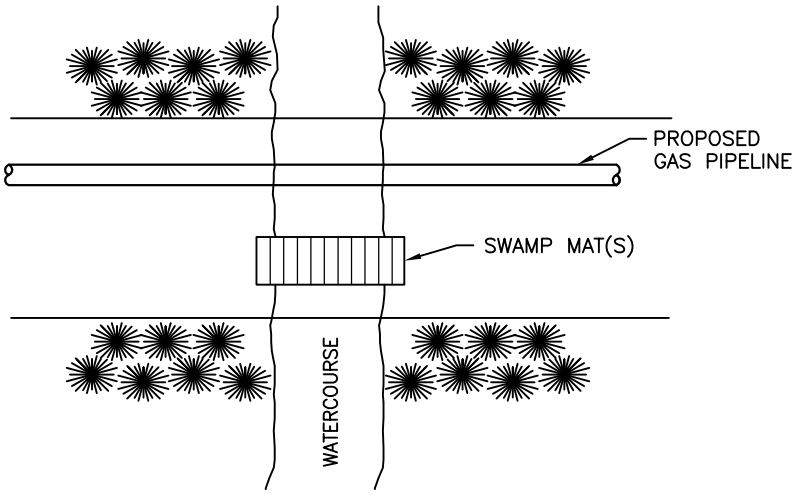

PLAN VIEW

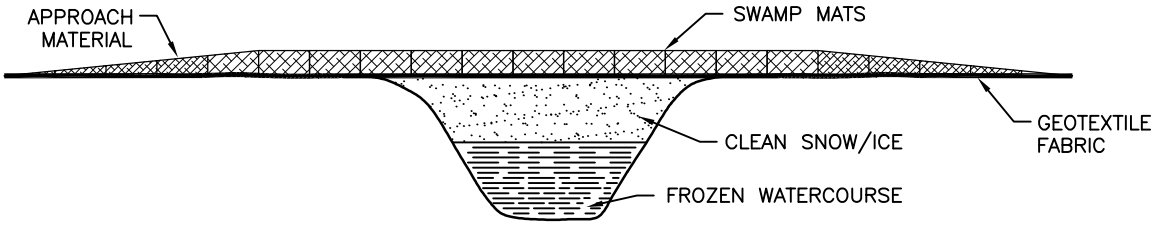

PROFILE 1

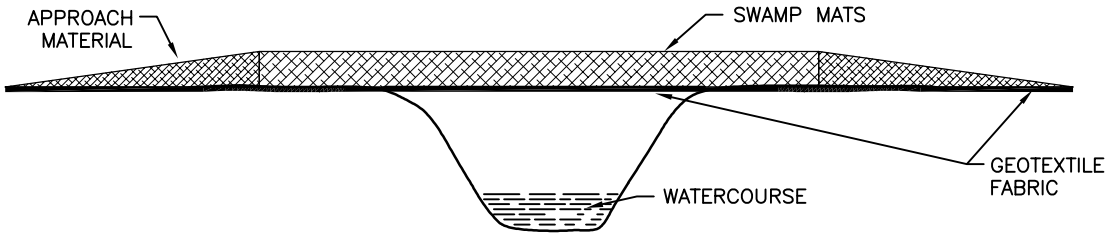

PROFILE 2

NOTES:

1. USE SWAMP MATS TO PROVIDE VEHICULAR ACCESS ACROSS WATERCOURSES IN BOTH FROZEN AND UN–FROZEN CONDITIONS.
2. FOR WATERCOURSES FROZEN TO THE BOTTOM, GEOTEXTILE FABRIC IS PLACED OVER EXISTING SNOW/ICE SURFACE PRIOR TO PLACEMENT OF THE SWAMP MATS. ALTERNATIVELY, CLEAN SNOW OR ICE CAN BE USED TO FILL THE CHANNEL PRIOR TO PLACEMENT OF THE GEOTEXTILE FABRIC AND SWAMP MATS (PROFILE 1).
3. FOR NARROW WATERCOURSES WITH STABLE BANKS, GEOTEXTILE FABRIC IS DRAPED ACROSS THE CHANNEL PRIOR TO PLACEMENT OF THE SWAMP MATS (PROFILE 2).

PRELIMINARY DRAFT FERC APPLICATION
NOT FOR CONSTRUCTION

Appendix 1E CONST–12

Alaska Pipeline Project

Construction Typicals – Equipment Crossing – Mat Bridge

Rev. C

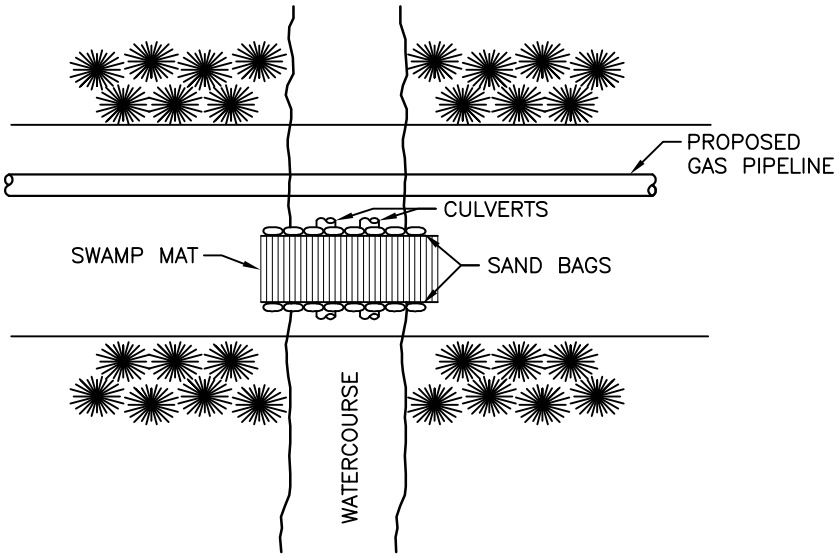

PLAN VIEW

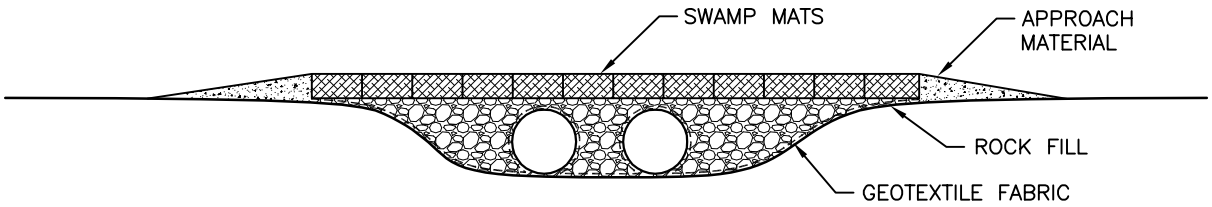

PROFILE VIEW

NOTES:

1. TO PROTECT THE STREAM BED, A GEOTEXTILE LINER SHALL BE LAID DOWN ON THE BED AND BANKS AFTER INSTALLING THE CULVERT BUT BEFORE PLACING ANY RAMP MATERIAL. GEOTEXTILE SHALL BE WIDE ENOUGH TO FOLD BACK INTO THE EDGE OF THE RAMP AT THE UPSTREAM AND DOWNSTREAM ENDS OF THE RAMP AND PREVENT ANY FILL FROM FALLING INTO THE STREAM. THE SIDES OF THE RAMP SHALL BE ARMOURED TO PROTECT IT FROM EROSION DURING HIGH STREAMFLOWS.
2. CULVERTS SHALL BE INSTALLED AS PER COMPANY'S REQUEST AND BE OF SUFFICIENT SIZE AND NUMBER TO HANDLE A ONE IN TWENTY YEAR STREAM FLOW. CULVERTS SHALL ALSO BE OF SUFFICIENT WALL THICKNESS AND GRADE TO HANDLE HEAVY LOADS.
3. RAMPS SHALL BE OF SUFFICIENT DEPTH TO PREVENT COLLAPSE OF THE CULVERT.
4. RAMPS SHALL BE CONSTRUCTED FROM COMPANY APPROVED LOCAL MINERAL SUBSOIL FREE OF ORGANICS OR OTHER DELETERIOUS MATERIAL.
5. ALL MATERIALS REQ'D SHALL BE SUPPLIED BY CONTRACTOR.

PRELIMINARY DRAFT FERC APPLICATION
NOT FOR CONSTRUCTION

Appendix 1E CONST–13

Alaska Pipeline Project

Construction Typicals – Equipment Crossing – Mat Rock/Culvert Bridge

Rev. C

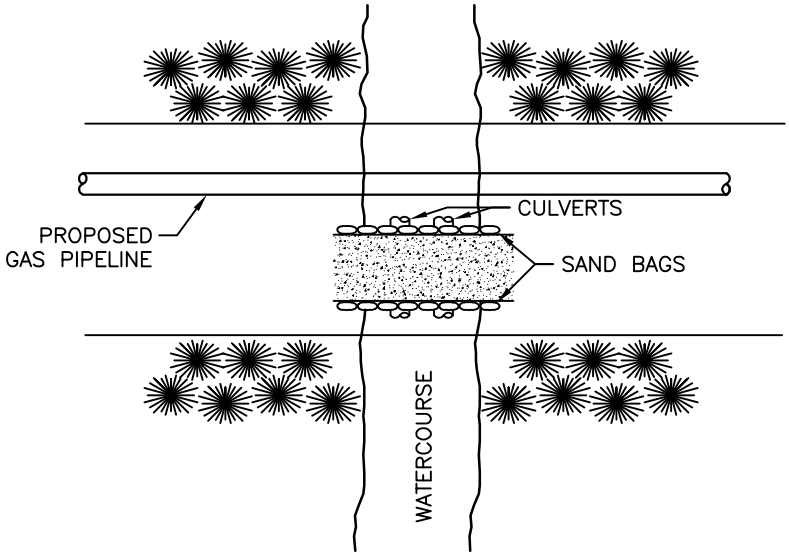

PLAN VIEW

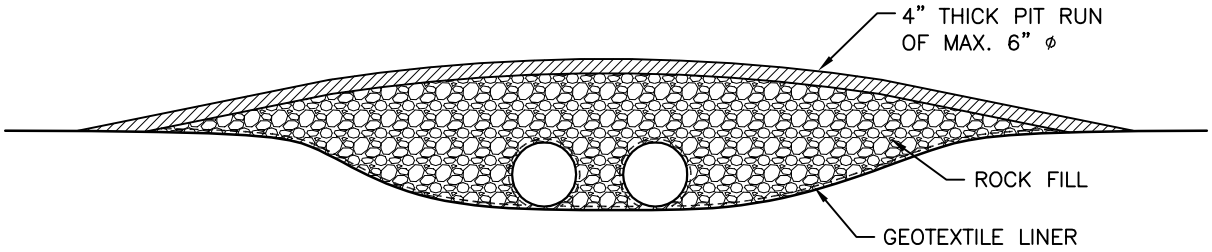

PROFILE VIEW

NOTES:

1. TO PROTECT THE STREAM BED, A GEOTEXTILE LINER SHALL BE LAID DOWN ON THE BED AND BANKS AFTER INSTALLING THE CULVERT BUT BEFORE PLACING ANY RAMP MATERIAL. GEOTEXTILE SHALL BE WIDE ENOUGH TO FOLD BACK INTO THE EDGE OF THE RAMP AT THE UPSTREAM AND DOWNSTREAM ENDS OF THE RAMP AND PREVENT ANY FILL FROM FALLING INTO THE STREAM. THE SIDES OF THE RAMP SHALL BE ARMOURED TO PROTECT IT FROM EROSION DURING HIGH STREAMFLOWS.
2. CULVERTS SHALL BE INSTALLED AS PER COMPANY'S REQUEST AND BE OF SUFFICIENT SIZE AND NUMBER TO HANDLE A ONE IN TWENTY YEAR STREAM FLOW. CULVERTS SHALL ALSO BE OF SUFFICIENT WALL THICKNESS AND GRADE TO HANDLE HEAVY LOADS.
3. RAMPS SHALL BE OF SUFFICIENT DEPTH TO PREVENT COLLAPSE OF THE CULVERT.
4. RAMPS SHALL BE CONSTRUCTED FROM COMPANY APPROVED LOCAL MINERAL SUBSOIL FREE OF ORGANICS OR OTHER DELETERIOUS MATERIAL.
5. ALL MATERIALS REQ'D SHALL BE SUPPLIED BY CONTRACTOR.
6. TOP COURSE OF 1" ROAD CRUSH MAY BE ADDED AT COMPANY'S REQUEST.

PRELIMINARY DRAFT FERC APPLICATION
NOT FOR CONSTRUCTION

Appendix 1E CONST–14

Alaska Pipeline Project

Construction Typicals – Equipment Crossing – Rock/Culvert Bridge

Rev. C

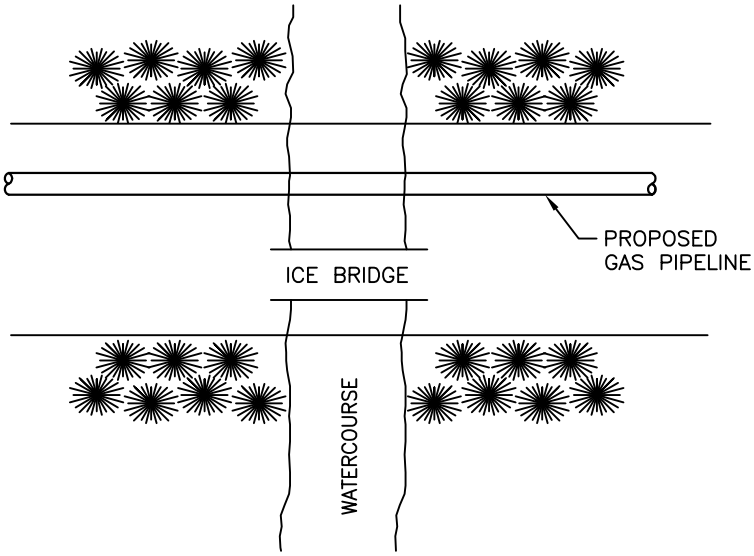

PLAN VIEW

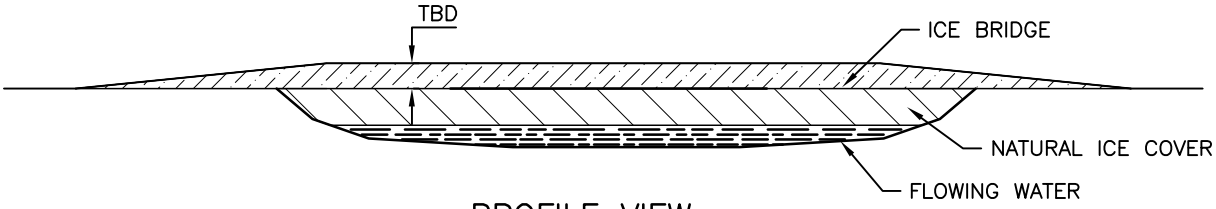

PROFILE VIEW

NOTES:

1. USE ICE BRIDGES TO PROVIDE VEHICULAR ACCESS ACROSS FLOWING WATERCOURSES WITH SIGNIFICANT NATURAL ICE COVER.
2. WATER FROM WATERCOURSES (OR HAULED TO SITE, IF NECCESSARY) IS PUMPED ONTO THE PROPOSED ICE BRIDGE TO INCREASE THE LOAD–BEARING CAPACITY FOR HEAVY EQUIPMENT USE.
3. MONITOR ICE BRIDGE INTEGRITY DURING CONSTRUCTION ACTIVITIES, FLOOD AS REQUIRED TO MAINTAIN LOAD–BEARING CAPACITY.
4. PRIOR TO SPRING BREAK–UP AND TO MINIMIZE ICE JAMS AND POTENTIAL FLOODING, THE ICE BRIDGE IS CLEANED OF DEBRIS AND NOTCHED AT SEVERAL LOCATIONS.

PRELIMINARY DRAFT FERC APPLICATION
NOT FOR CONSTRUCTION

Appendix 1E CONST–15

Alaska Pipeline Project

Construction Typicals – Equipment Crossing – Ice Bridge

Rev. C

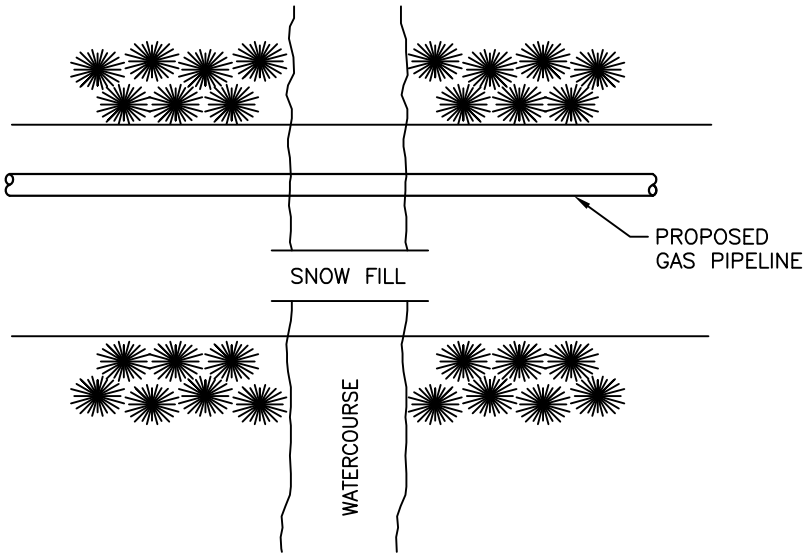

PLAN VIEW

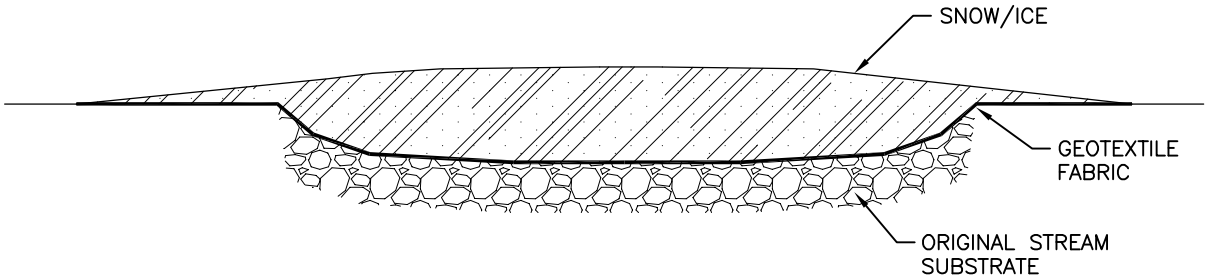

PROFILE VIEW

NOTES:

1. DURING FROZEN CONDITIONS, USE SNOW FILLS TO PROVIDE VEHICULAR ACCESS ACROSS WATERCOURSES WITH LITTLE OR NO FLOW.
2. CLEAN SNOW FROM ADJACENT AREAS IS PUSHED ONTO THE CROSSING LOCATION TO PROVIDE A LEVEL SURFACE FOR EQUIPMENT. IF THE SUPPLY OF CLEAN SNOW IS INADEQUATE, SNOW CAN BE PROVIDED BY SNOWMAKING MACHINES OR HAULED FROM NEARBY AREAS, SUCH AS LAKES.
3. PRIOR TO SPRING BREAK–UP AND TO MINIMIZE POTENTIAL FLOODING, THE SNOW FILL IS CLEARED OF DEBRIS AND V–NOTCHED.
4. GEOTEXTILE FABRIC TO BE PLACED ACROSS WATERBODY BEFORE SNOW FILL, AND REMOVED THE FOLLOWING SPRING.

PRELIMINARY DRAFT FERC APPLICATION
NOT FOR CONSTRUCTION

Appendix 1E CONST–16

Alaska Pipeline Project

Construction Typicals – Equipment Crossing – Clean Snow Fill

Rev. C

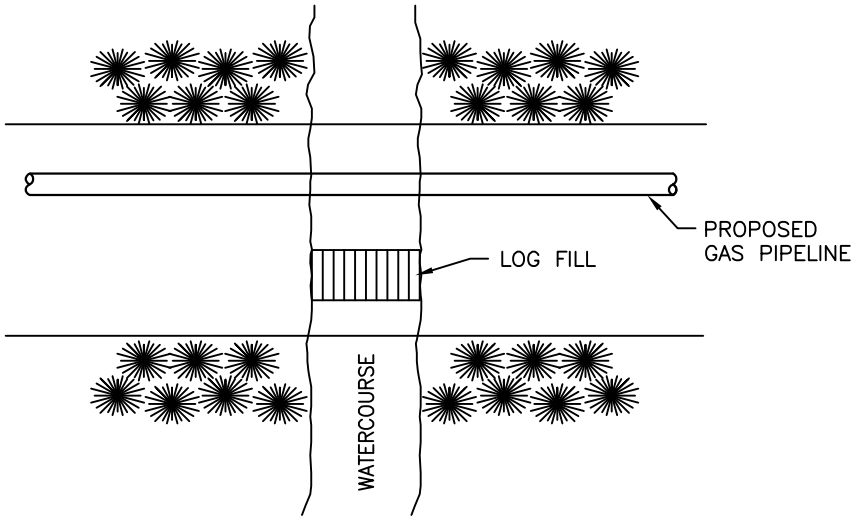

PLAN VIEW

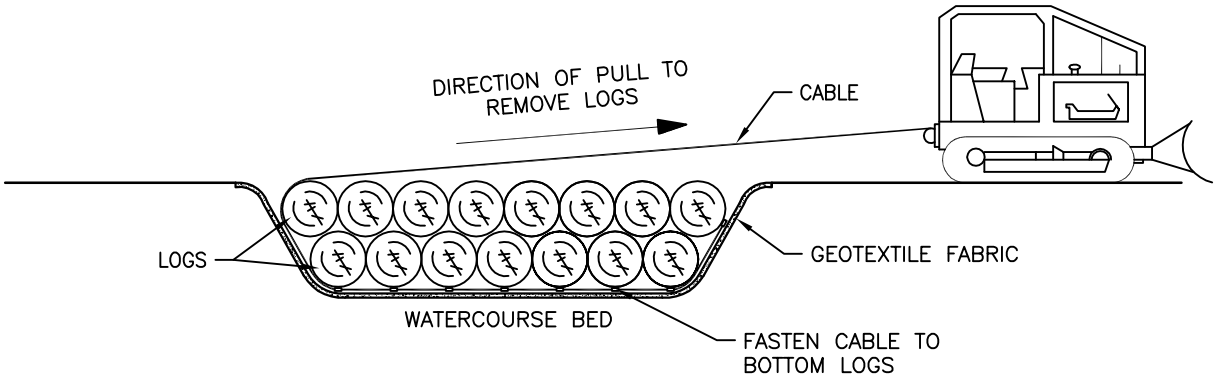

PROFILE

NOTES:

1. USE LOG FILL TO PROVIDE VEHICULAR ACCESS ACROSS SMALL WATERCOURSES WITH LITTLE OR NO FLOW.
2. USE NON–MERCHANTABLE TIMBER FOR THE LOG FILL. MERCHANTABLE TIMBER CAN BE USED IF THE APPROPRIATE REGULATORY AUTHORITY HAS GRANTED A WAIVER.
3. THE LOGS ARE BUNDLED WITH CABLE TO FACILITATE EASY REMOVAL AND PLACED ONTO GEOTEXTILE FABRIC IN THE CHANNEL. THE GEOTEXTILE FABRIC IS THEN WRAPPED AROUND THE LOG FILL.
4. APPROVED MATERIAL (e.g. RIG MAT, SNOW, SOIL) IS PLACED OVER THE LOG FILL TO PROVIDE A STABLE DRIVING SURFACE.
5. REMOVE CROSSING AT COMPLETION OF CONSTRUCTION OR PRIOR TO SPRING BREAK–UP.
6. ENSURE WATERCOURSE IS CLEARED OF DEBRIS OR SOIL THAT MAY HAVE BEEN DEPOSITED DURING CONSTRUCTION ACTIVITIES.

PRELIMINARY DRAFT FERC APPLICATION
NOT FOR CONSTRUCTION

Appendix 1E CONST–17

Alaska Pipeline Project

Construction Typicals – Equipment Crossing – Log Fill

Rev. C

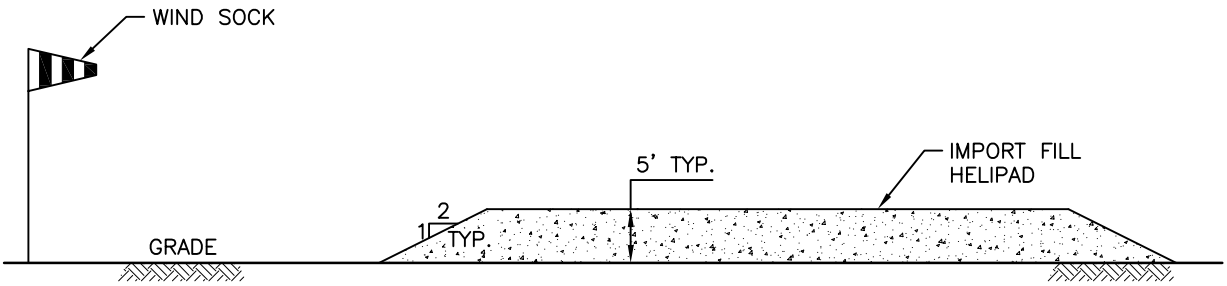

PROFILE

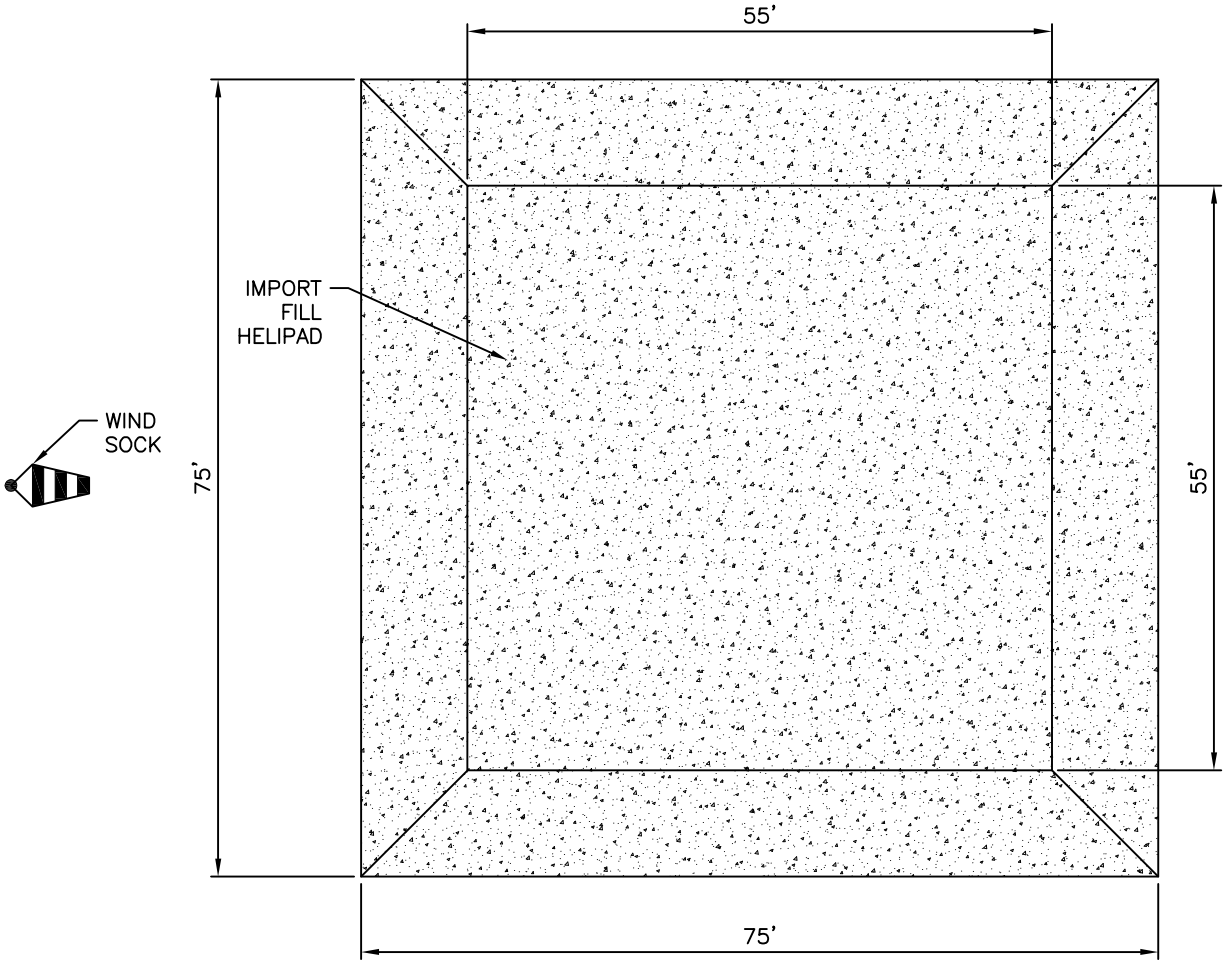

PLAN

PRELIMINARY DRAFT FERC APPLICATION
NOT FOR CONSTRUCTION

Appendix 1E CONST–20

Alaska Pipeline Project

Construction Typicals – Helipads

Rev. D

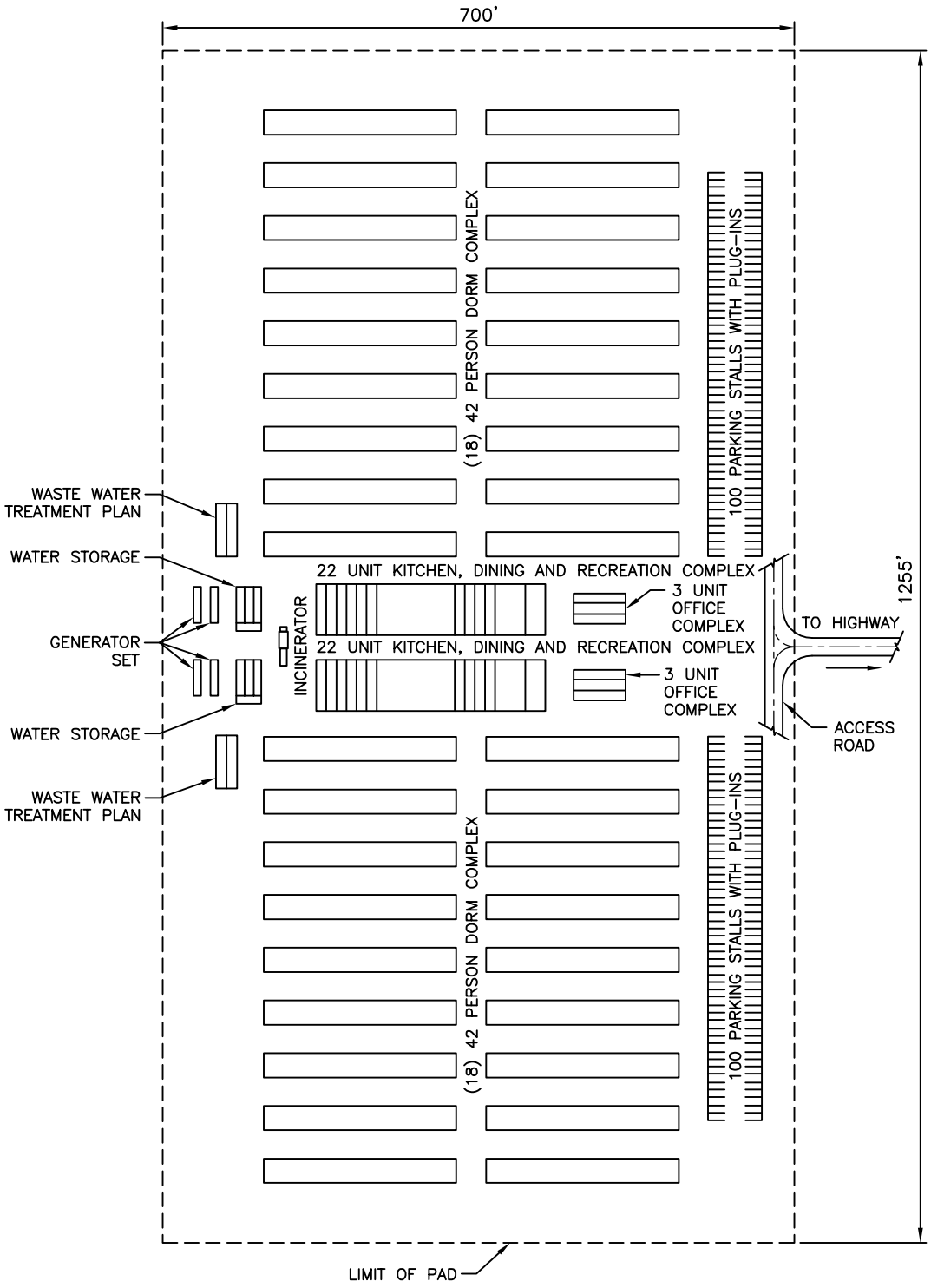

PRELIMINARY DRAFT FERC APPLICATION
NOT FOR CONSTRUCTION

Appendix 1E CONST-22A

Alaska Pipeline Project

Construction Typicals – 1500 Person Camp – 20 Acres

Rev. C

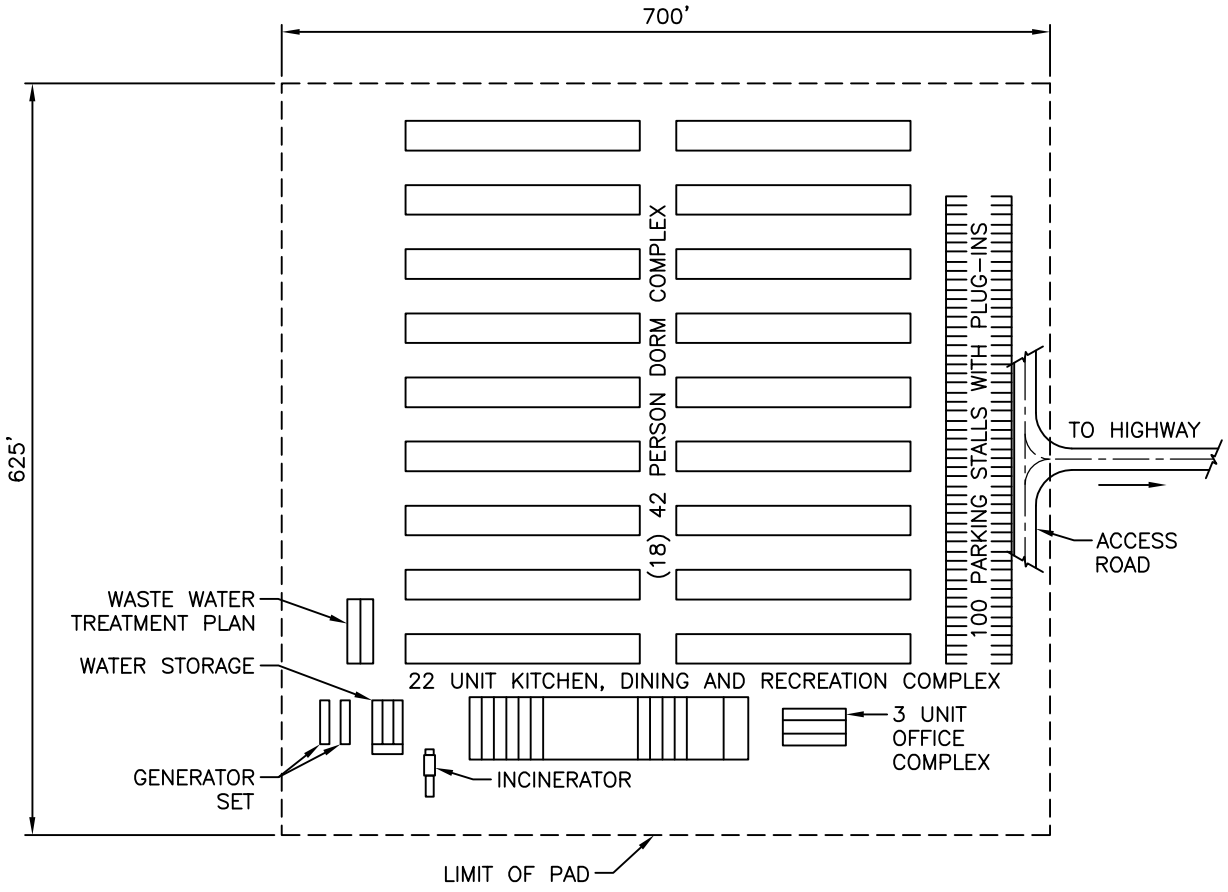

PRELIMINARY DRAFT FERC APPLICATION
NOT FOR CONSTRUCTION

Appendix 1E CONST–22B

Alaska Pipeline Project

Construction Typicals – 750 Person Camp – 10 Acres

Rev. C

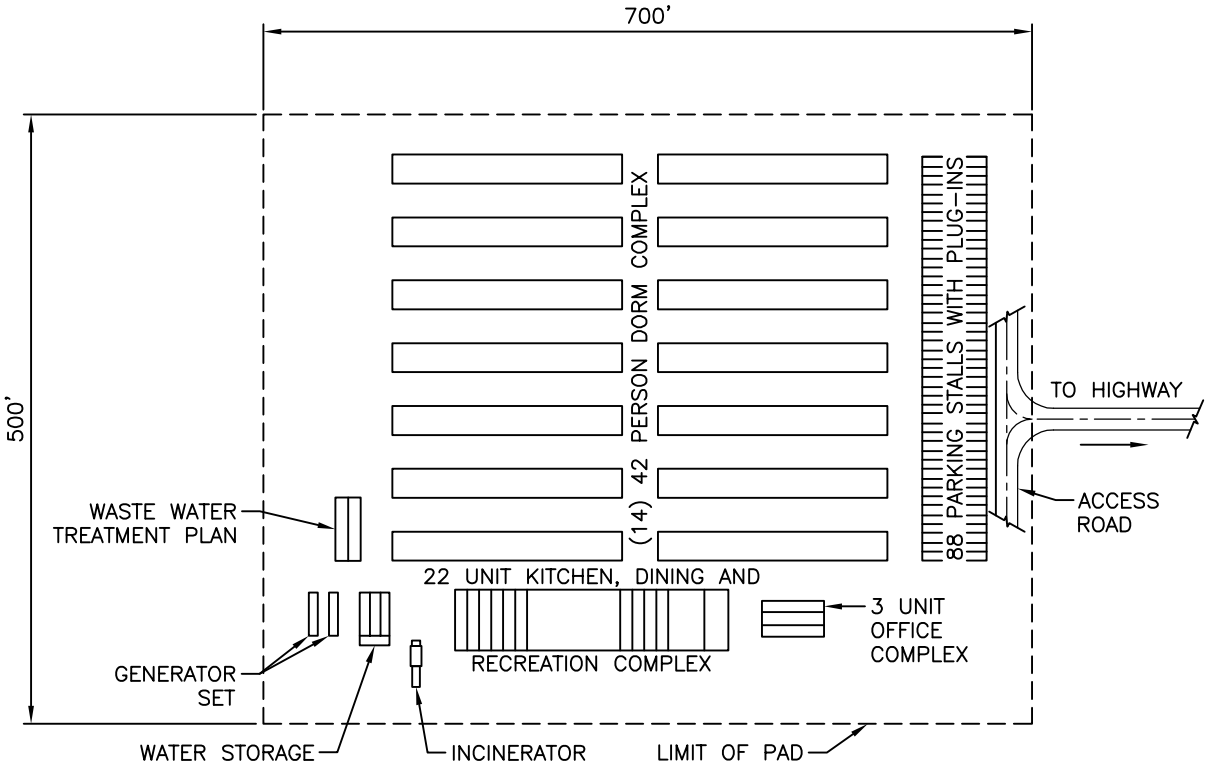

PRELIMINARY DRAFT FERC APPLICATION
NOT FOR CONSTRUCTION

Appendix 1E CONST–22C

Alaska Pipeline Project

Construction Typicals – 500 Person Camp – 8 Acres

Rev. C

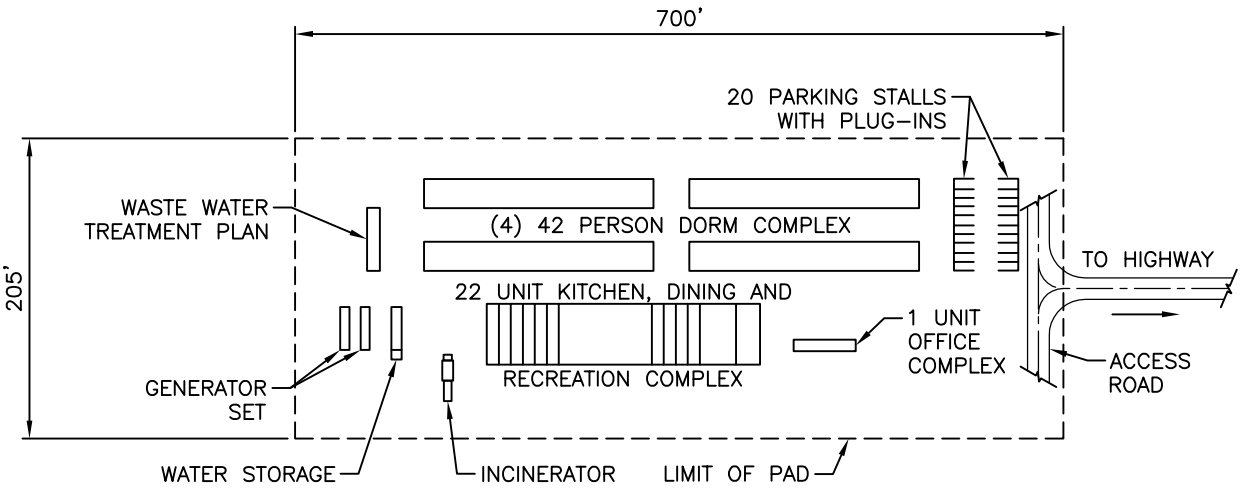

PRELIMINARY DRAFT FERC APPLICATION
NOT FOR CONSTRUCTION

Appendix 1E CONST-22D

Alaska Pipeline Project

Construction Typicals – 150 Person Camp – 3 Acres

Rev. C

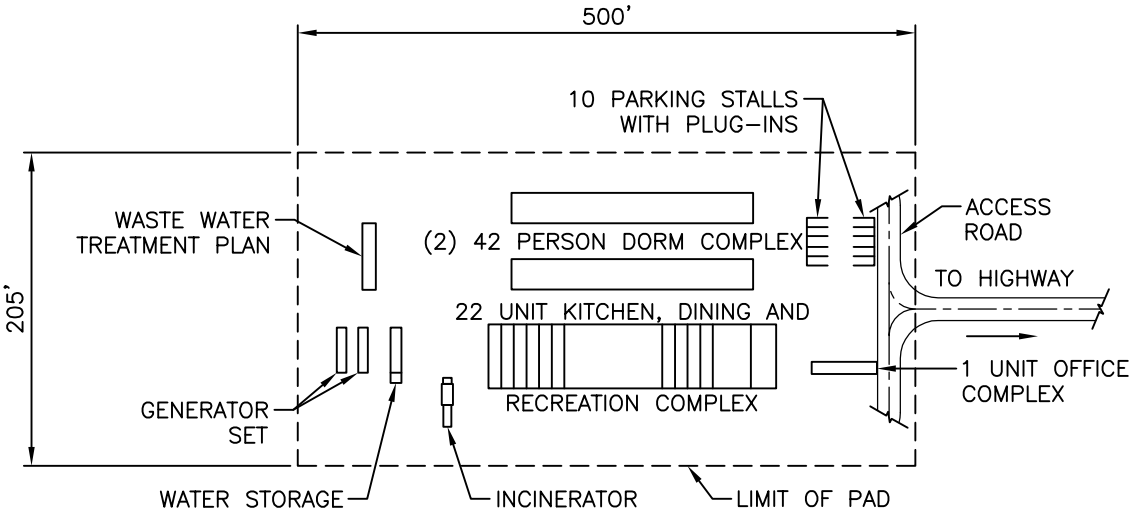

PRELIMINARY DRAFT FERC APPLICATION
NOT FOR CONSTRUCTION

Appendix 1E CONST-22E

Alaska Pipeline Project

Construction Typicals – 50 Person Camp – 2 Acres

Rev. C

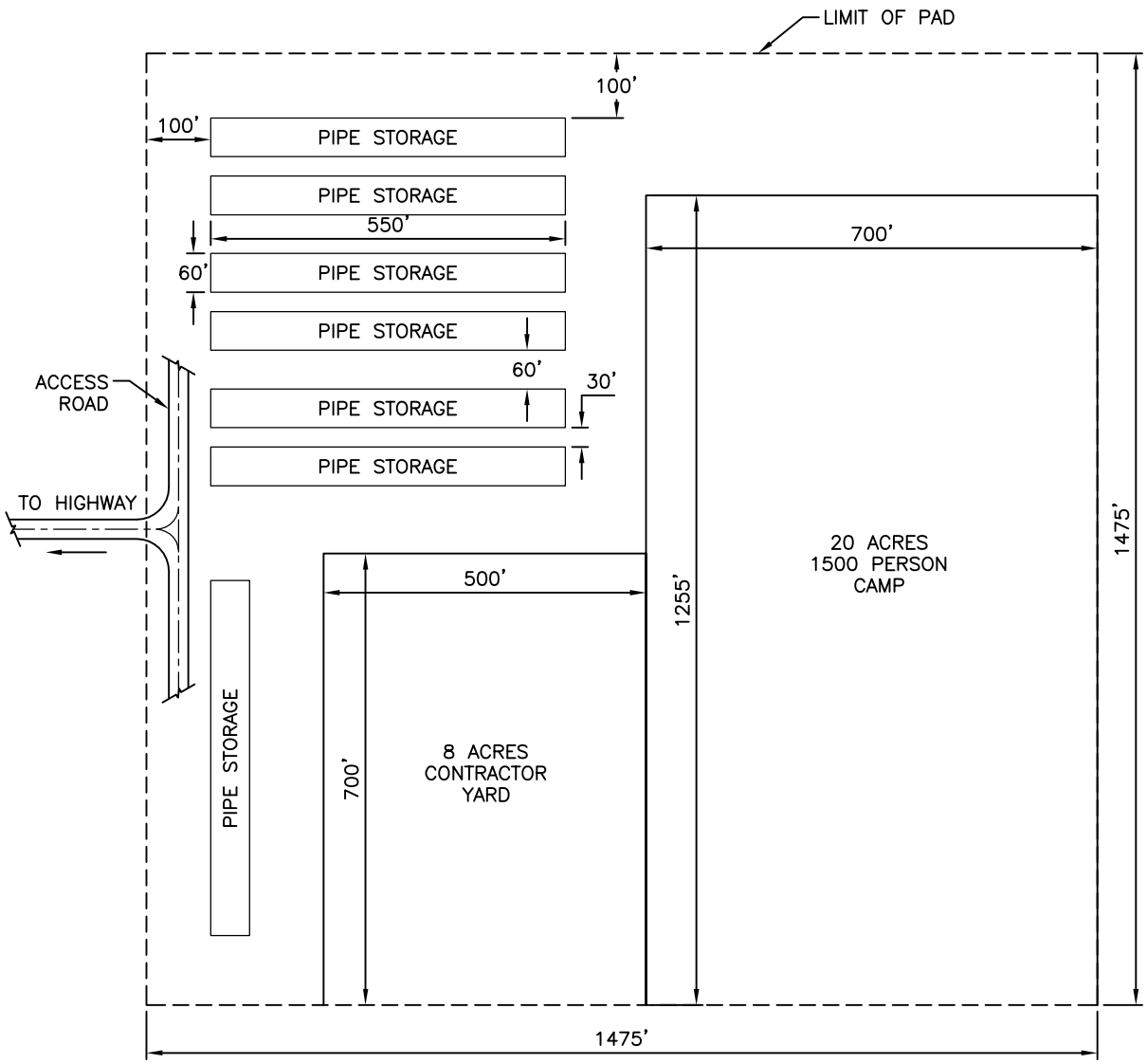

50 ACRES TOTAL

PRELIMINARY DRAFT FERC APPLICATION
NOT FOR CONSTRUCTION

Appendix 1E CONST–23A

Alaska Pipeline Project

Construction Typicals – Pipe Storage/Camp/Contractor Yard – Option 1

Rev. C

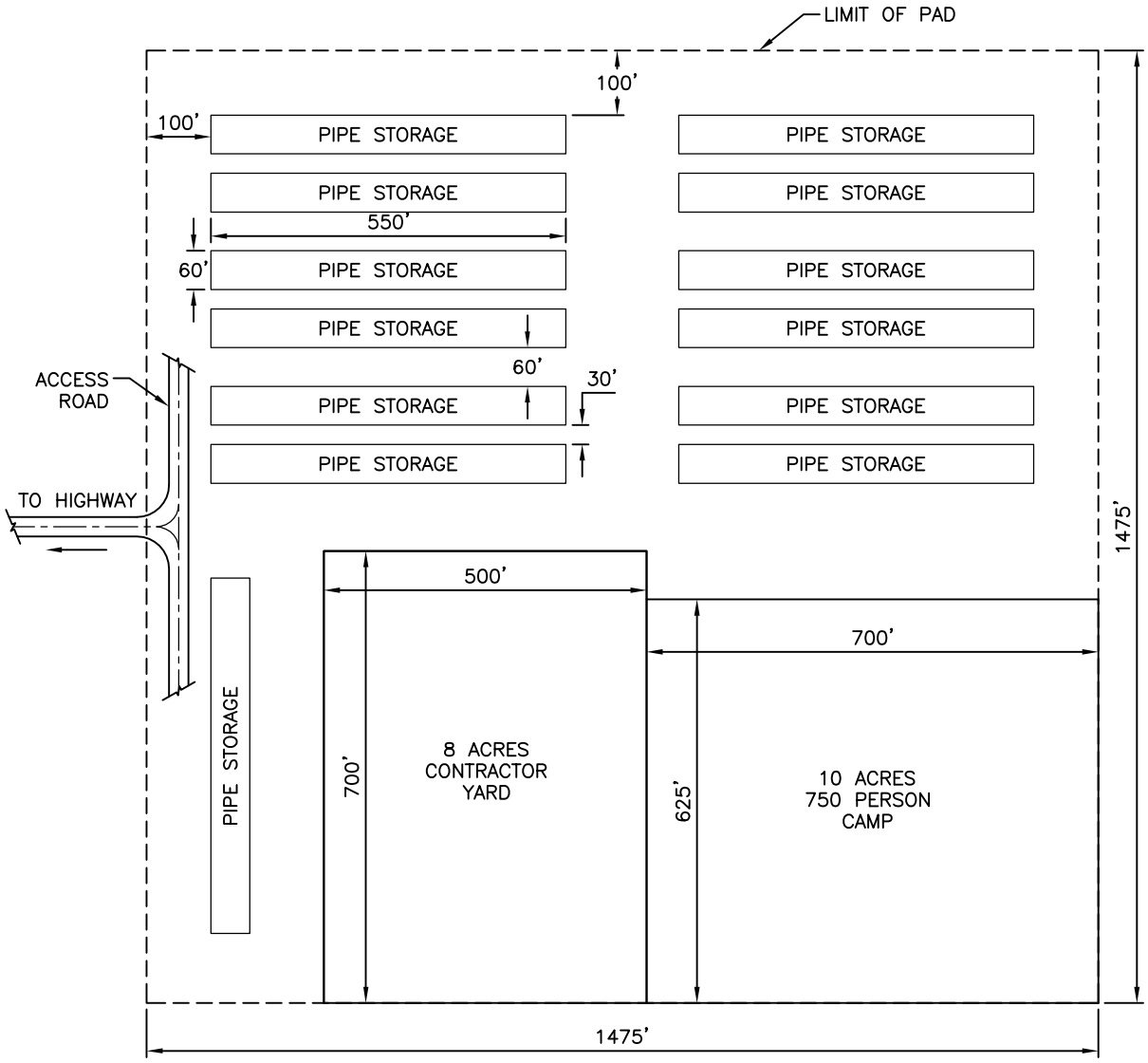

50 ACRES TOTAL

PRELIMINARY DRAFT FERC APPLICATION
NOT FOR CONSTRUCTION

Appendix 1E CONST–23B

Alaska Pipeline Project

Construction Typicals – Pipe Storage/Camp/Contractor Yard – Option 2

Rev. C

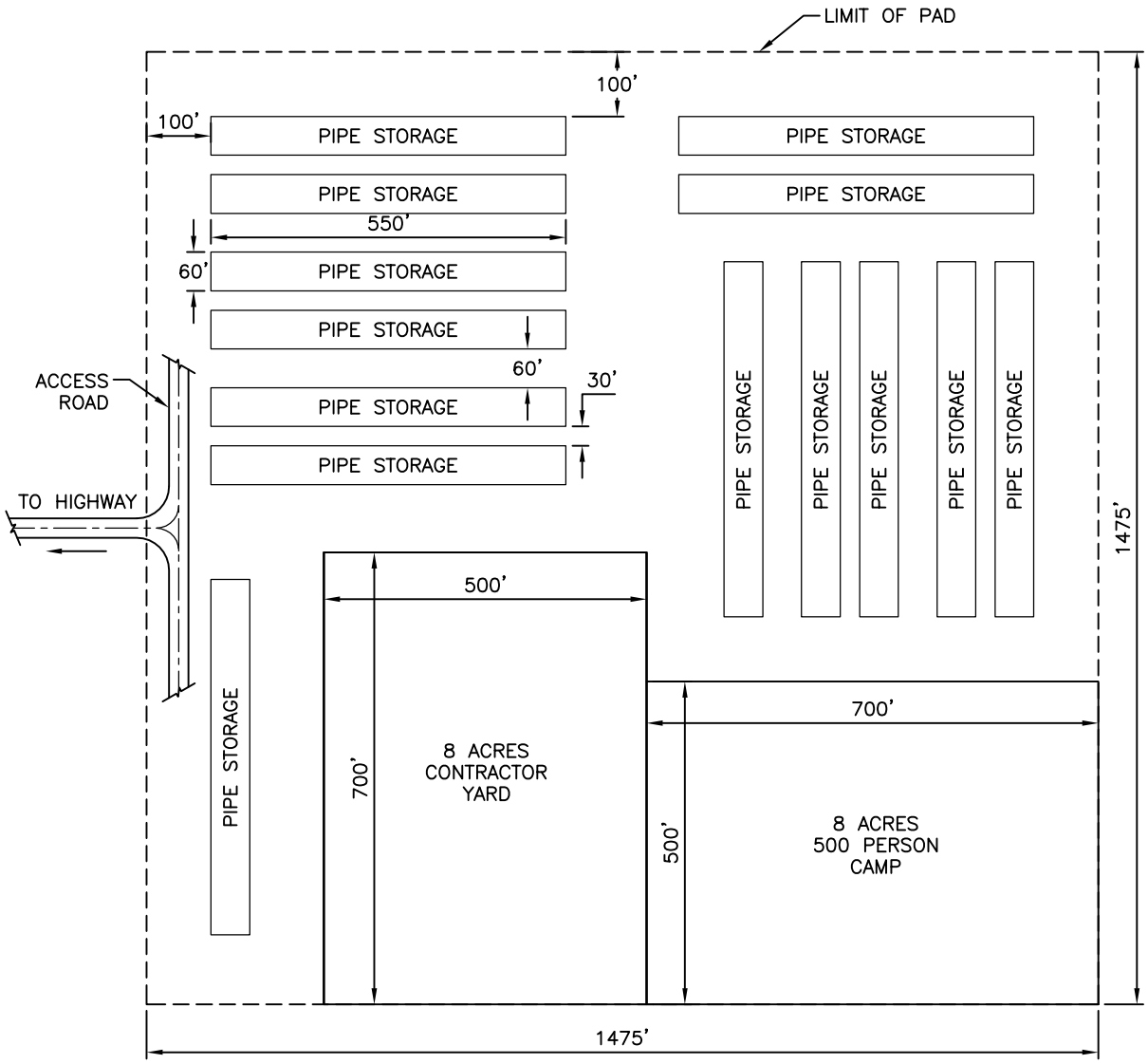

50 ACRES TOTAL

PRELIMINARY DRAFT FERC APPLICATION
NOT FOR CONSTRUCTION

Appendix 1E CONST–23C

Alaska Pipeline Project

Construction Typicals – Pipe Storage/Camp/Contractor Yard – Option 3

Rev. C

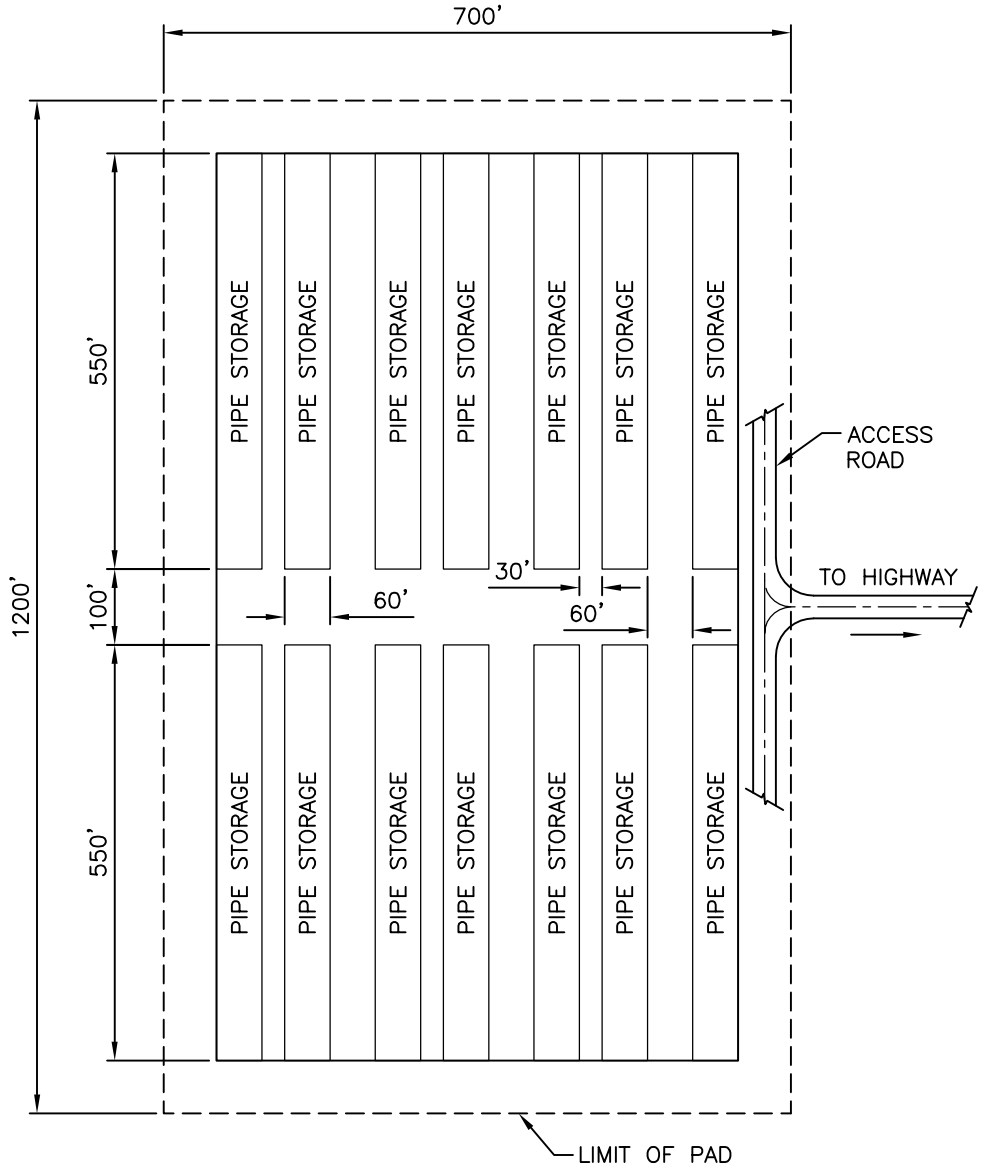

PRELIMINARY DRAFT FERC APPLICATION
NOT FOR CONSTRUCTION

Appendix 1E CONST–23D

Alaska Pipeline Project

Construction Typicals – Stand Alone Pipe Storage Yard – 20 Acres

Rev. B

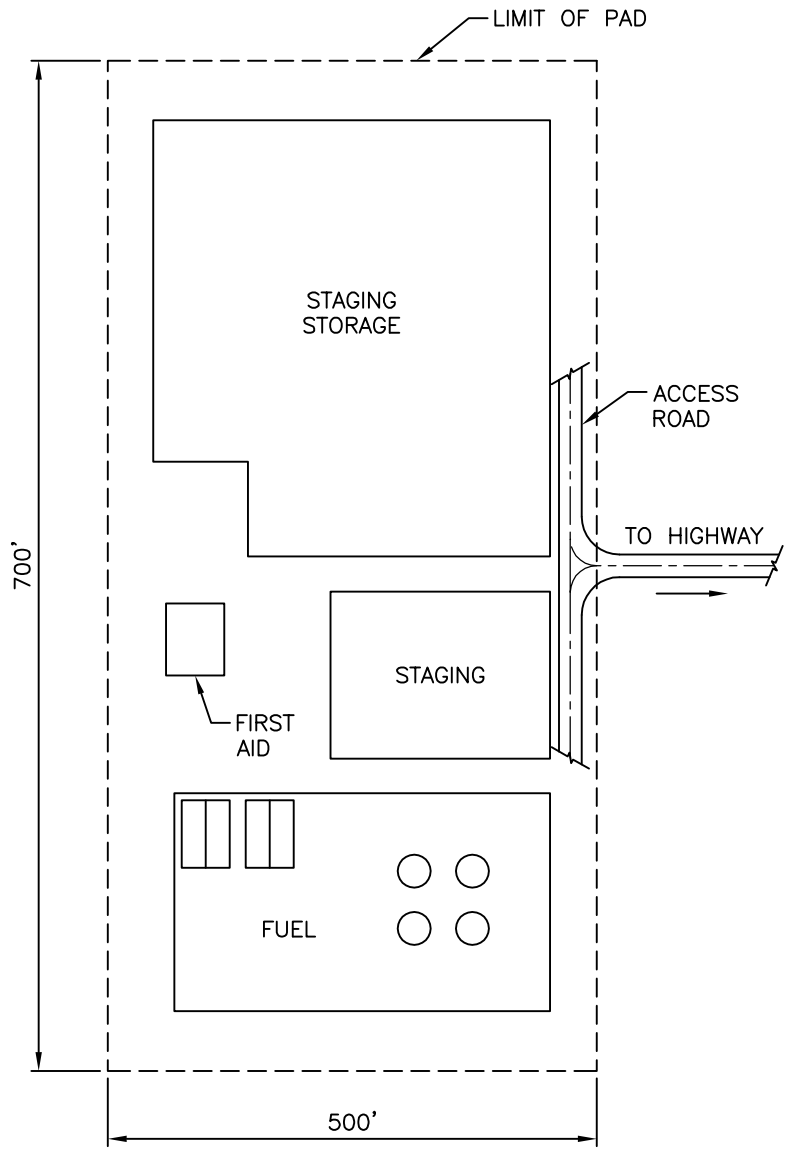

PRELIMINARY DRAFT FERC APPLICATION
NOT FOR CONSTRUCTION

Appendix 1E CONST–24

Alaska Pipeline Project

Construction Typicals – Stand Alone Contractor Yard – 8 Acres

Rev. C

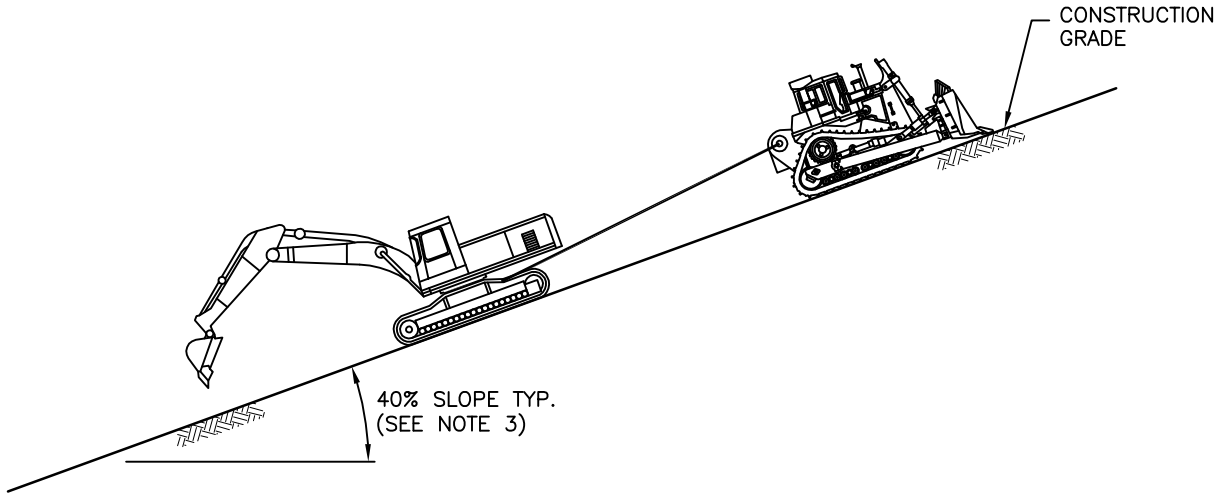

NOTES:

1. WINCHES MAY BE REQUIRED FOR MOVING EQUIPMENT AND MATERIAL, AND DURING CONSTRUCTION ON STEEP LONGITUDINAL SLOPES.
2. WINCHES WITH EITHER BE FIXED WINCHES OR TRACKED EQUIPMENT WITH WINCHES.
3. WINCHES WILL TYPICALLY BE REQUIRED FOR SLOPES OF 40% (22°) AND UP.

PRELIMINARY DRAFT FERC APPLICATION
NOT FOR CONSTRUCTION

Appendix 1E CONST–28

Alaska Pipeline Project

Construction Typicals – Construction on Steep Longitudinal Slopes

Rev. C

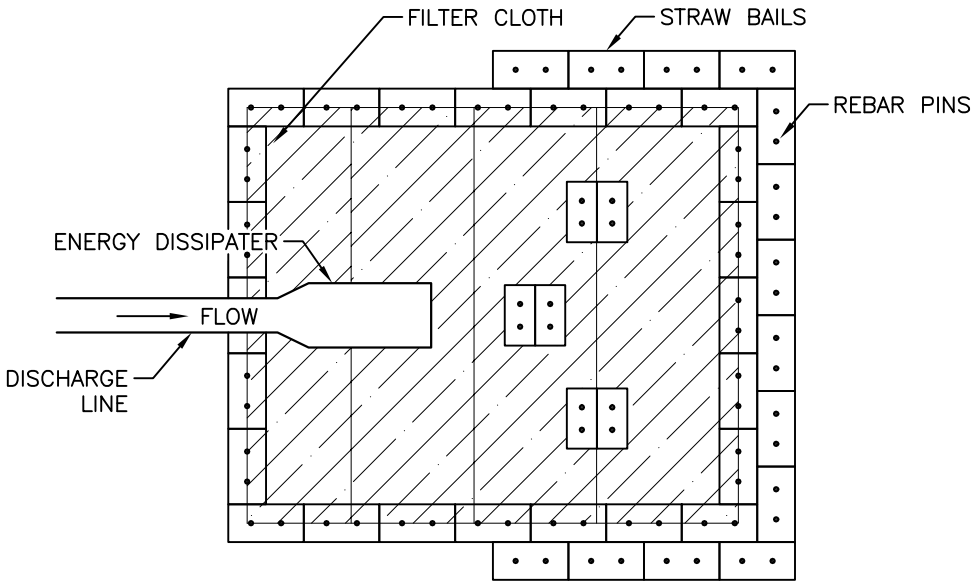

PLAN

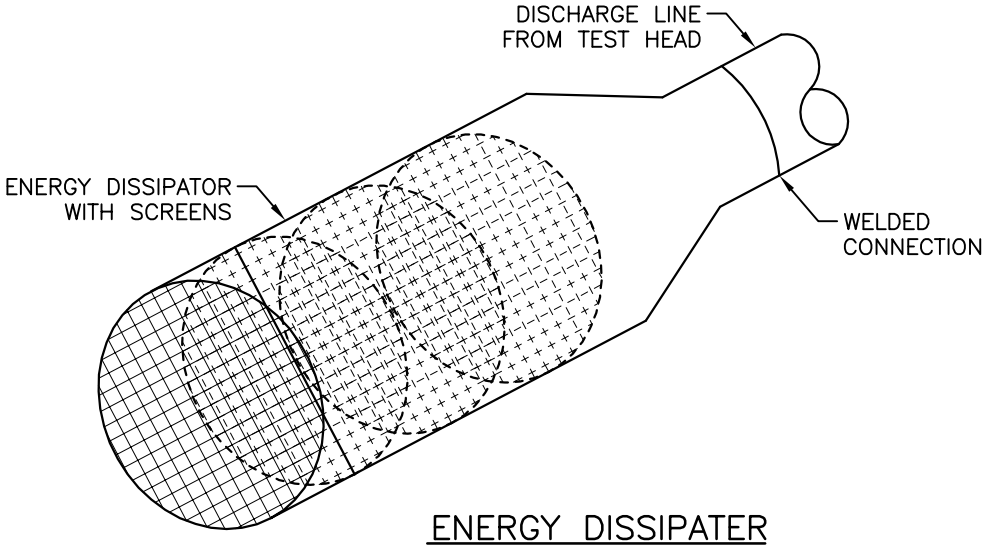

ENERGY DISSIPATER

PRELIMINARY DRAFT FERC APPLICATION
NOT FOR CONSTRUCTION

Appendix 1E CONST–33

Alaska Pipeline Project

Construction Typicals – Typical Water Discharge Site

Rev. C

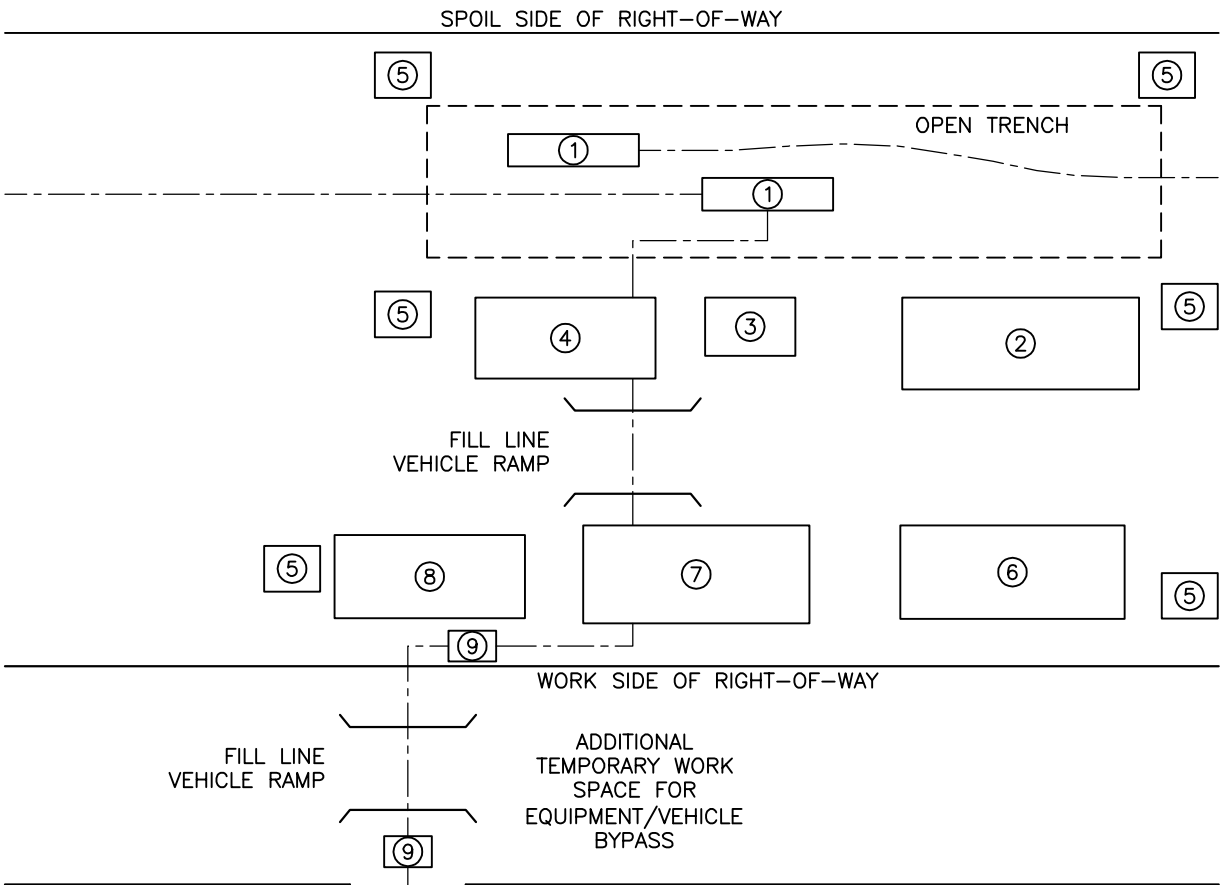

LEGEND:

1. TEST HEAD
2. TEST SHACK
3. SQEEZE PUMP
4. FILL PUMP
5. LIGHT STANDS
6. MECHANICAL TRAILER
7. BOILER TRAILER (WINTER)
8. FUEL TRAILER
9. BOOSTER PUMPS
10. WATER INTAKE

NOTE:

1. FOR WINTER TESTING OPEN TRENCH, FILL LINE AND PUMPS MAY BE HOARDED AND HEATED.

PRELIMINARY DRAFT FERC APPLICATION
NOT FOR CONSTRUCTION

Appendix 1E CONST-34

Alaska Pipeline Project

Construction Typicals – Hydrostatic Test Point

Rev. C

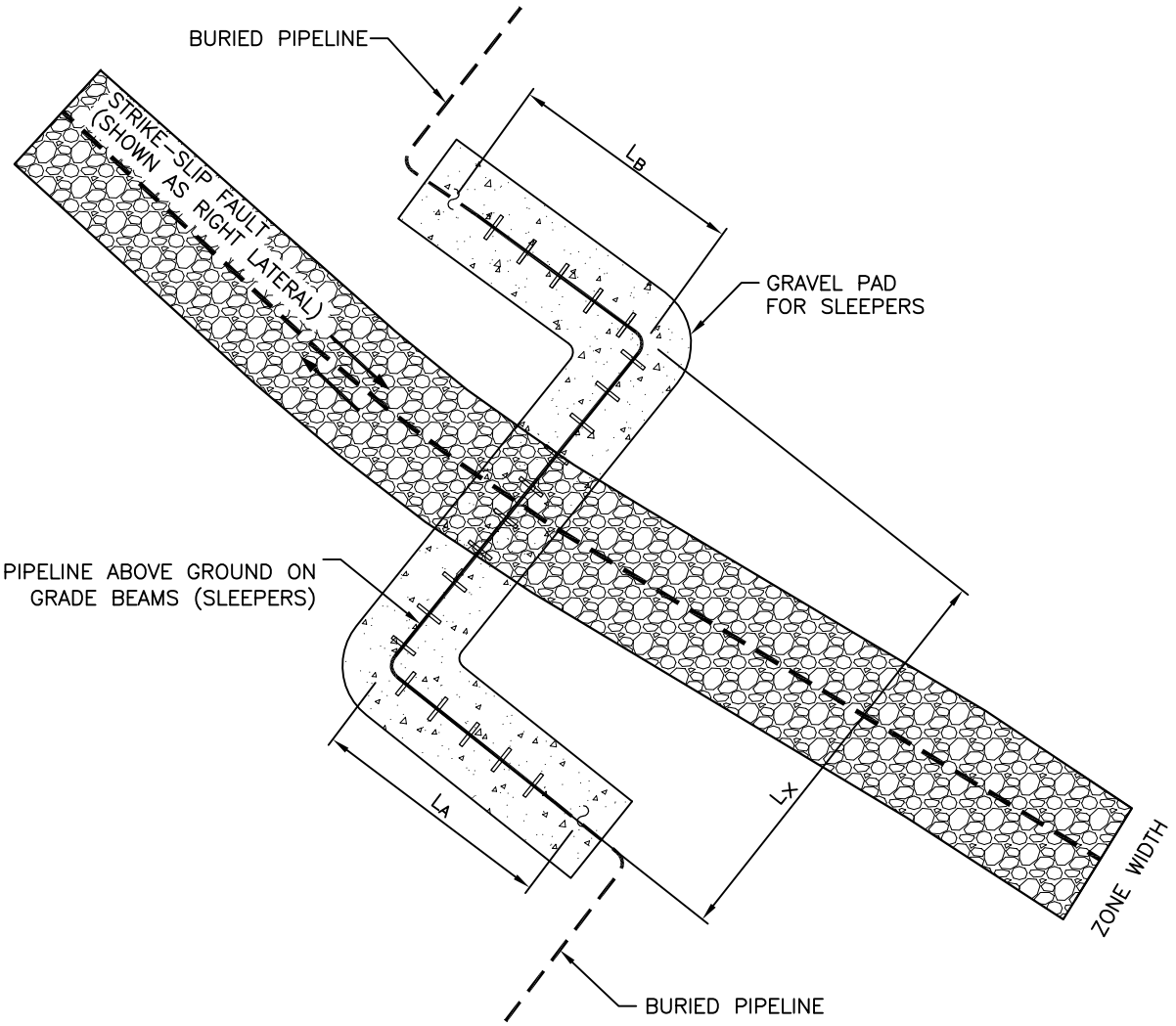

NOTES:

1. "ZEE" CONFIGURATION MAY BE OPPOSITE HAND.
2. DESIGN PARAMETERS TO BE DETERMINED ON A SITE SPECIFIC BASIS INCLUDE:
   - TRANSITION LEGS, L_A AND L_B
   - CROSSING LEG, L_X
   - SLEEPER SPACING
   - SLEEPER BEAM LENGTH
   - PIPE SHOE LENGTH
   - TYPE AND THICKNESS OF GRANULAR PAD TO SUPPORT SLEEPERS

PRELIMINARY DRAFT FERC APPLICATION
NOT FOR CONSTRUCTION

Appendix 1E FAULT–01

Alaska Pipeline Project

Conceptual "Zee" Fault Crossing Design – Strike–Slip Faults

Rev. C

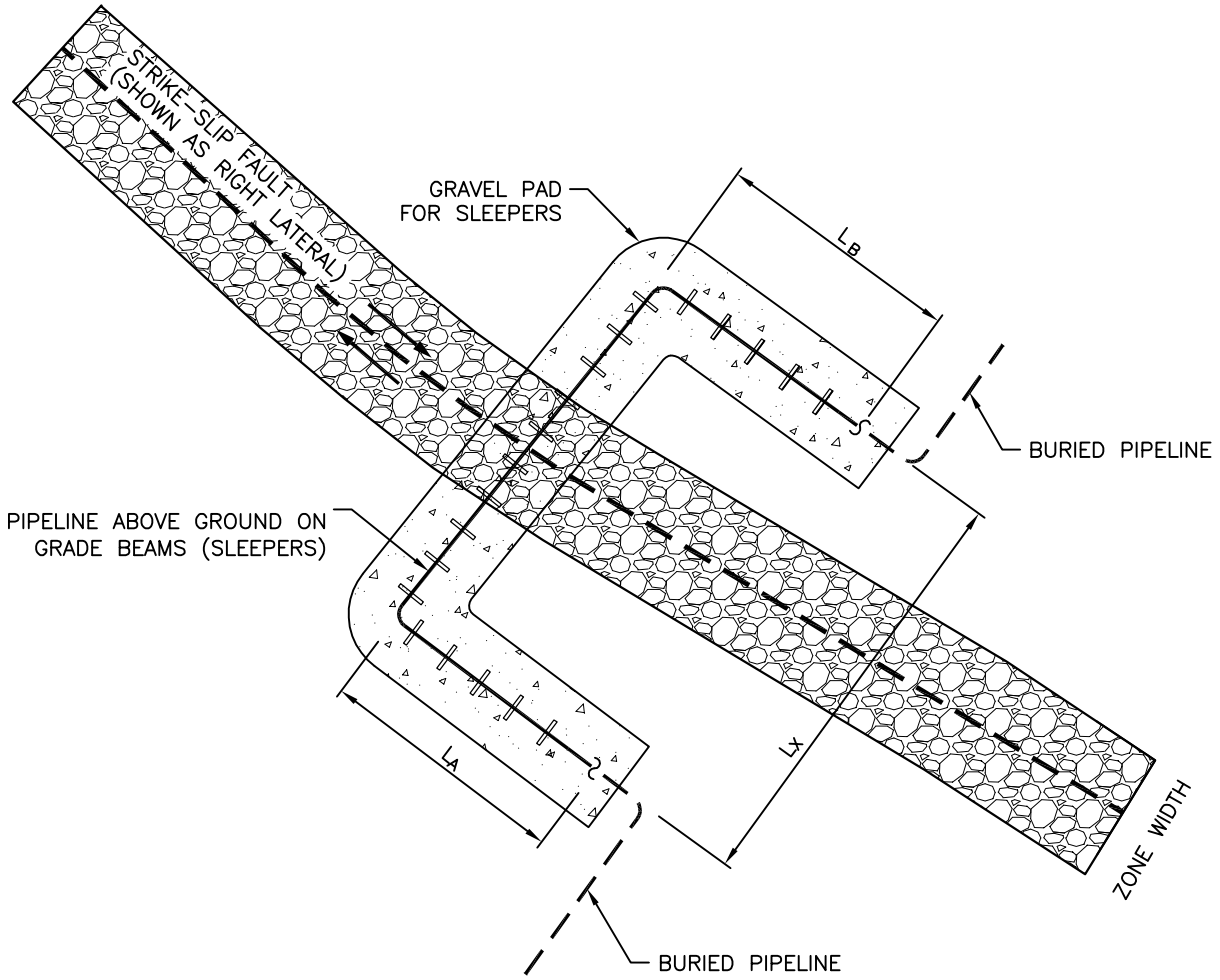

NOTES:

1. "U" CONFIGURATION MAY BE OPPOSITE HAND.
2. DESIGN PARAMETERS TO BE DETERMINED ON A SITE SPECIFIC BASIS INCLUDE:
   - TRANSITION LEGS, L_A AND L_B
   - CROSSING LEG, L_X
   - SLEEPER SPACING
   - SLEEPER BEAM LENGTH
   - PIPE SHOE LENGTH
   - TYPE AND THICKNESS OF GRANULAR PAD TO SUPPORT SLEEPERS

PRELIMINARY DRAFT FERC APPLICATION
NOT FOR CONSTRUCTION

Appendix 1E FAULT–02

Alaska Pipeline Project

Conceptual "U" Fault Crossing Design – Strike–Slip Faults

Rev. C

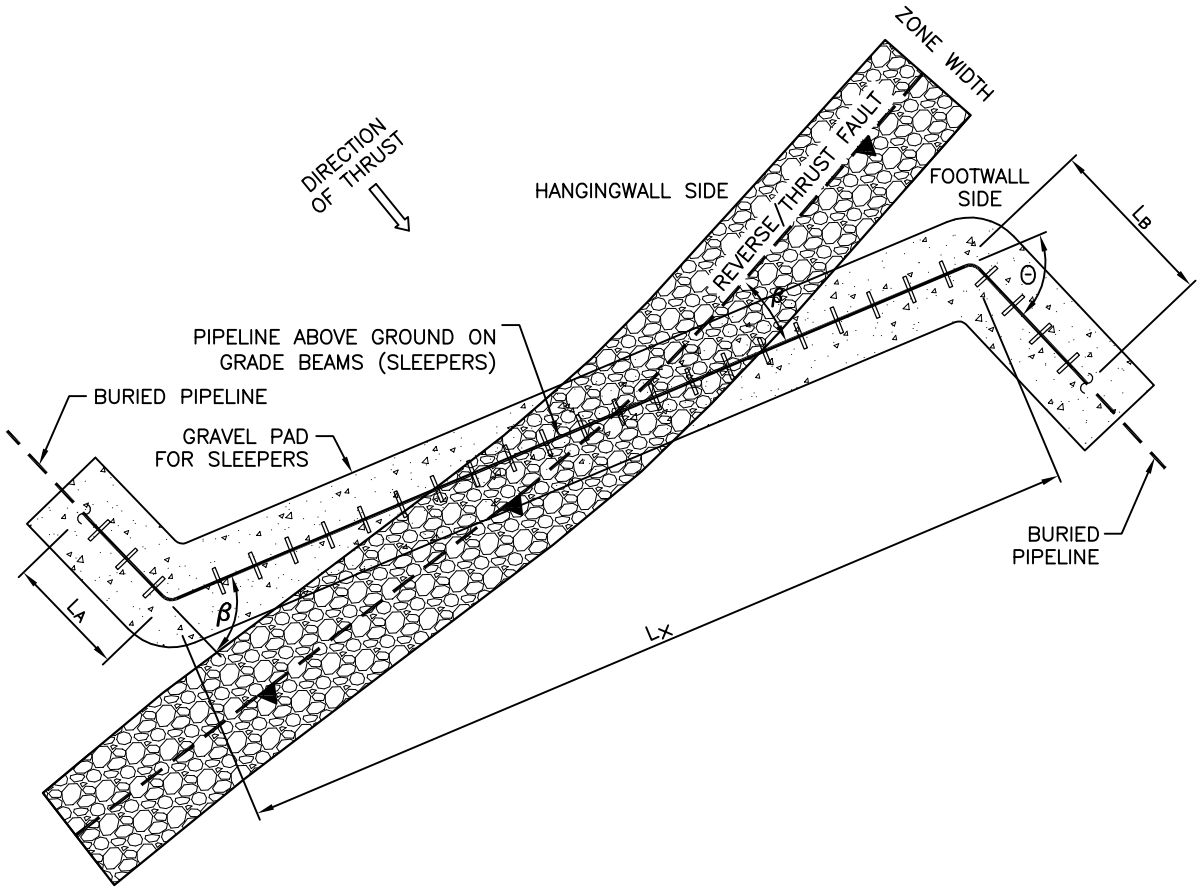

NOTES:

1. "ZEE" CONFIGURATION MAY BE OPPOSITE HAND.
2. DESIGN PARAMETERS TO BE DETERMINED ON A SITE SPECIFIC BASIS INCLUDE:
   - TRANSITION LEGS, L_A AND L_B
   - CROSSING LEG, L_X
   - SLEEPER SPACING
   - SLEEPER BEAM LENGTH
   - PIPE SHOE LENGTH
   - TYPE AND THICKNESS OF GRANULAR PAD TO SUPPORT SLEEPERS
   - INTERSECTION ANGLE, β
   - BEND ANGLE, Θ

PRELIMINARY DRAFT FERC APPLICATION
NOT FOR CONSTRUCTION

Appendix 1E FAULT–03

Alaska Pipeline Project

Conceptual "Zee" Fault Crossing Design – Reverse or Thrust Faults

Rev. C

APPENDIX 1F TABLE SUMMARIZING DISTANCES TO BORROW SITES

This appendix contains Table 1F-1, which lists the distances to borrow sites for the proposed Alaska Mainline and Point Thomson Gas Transmission Pipeline routes.

DRAFT

TABLE 1F-1

Alaska Pipeline Project
Distances to Borrow Sites

Segment/Borough or Census Area	Name of Borrow Area	Approximate Milepost	Distance and Direction from Pipeline [a]	Size [b] (acres)	Status[c]
ALASKA MAINLINE					
North Slope Borough	65-9-102-2 (MS 3)	[TBD]	[TBD]	235	[TBD]
North Slope Borough	65-9-026-2	[TBD]	[TBD]	408	[TBD]
North Slope Borough	ALTERNATE 133-1	[TBD]	[TBD]	254	[TBD]
North Slope Borough	65-9-041-2	[TBD]	[TBD]	122	[TBD]
North Slope Borough	65-9-024-2	[TBD]	[TBD]	341	[TBD]
North Slope Borough	65-9-040-2	[TBD]	[TBD]	56	[TBD]
North Slope Borough	65-9-096-2	[TBD]	[TBD]	256	[TBD]
North Slope Borough	65-9-074-2	[TBD]	[TBD]	136	[TBD]
North Slope Borough	ALTERNATE 65-9-073-2	[TBD]	[TBD]	171	[TBD]
North Slope Borough	65-9-072-2	[TBD]	[TBD]	381	[TBD]
North Slope Borough	ALTERNATE SITE 34 EXTRA	[TBD]	[TBD]	187	[TBD]
North Slope Borough	SOUTH OF DAN CREEK	[TBD]	[TBD]	98	[TBD]
North Slope Borough	PROPOSED SITE 1 EXTRA	[TBD]	[TBD]	62	[TBD]
North Slope Borough	65-9-067-2	[TBD]	[TBD]	265	[TBD]
North Slope Borough	ALTERNATE 65-9-063-2	[TBD]	[TBD]	69	[TBD]
North Slope Borough	65-9-062-2	[TBD]	[TBD]	94	[TBD]
North Slope Borough	ALTERNATE SITE 35 EXTRA	[TBD]	[TBD]	201	[TBD]
North Slope Borough	SLOPE MOUNTAIN SITE	[TBD]	[TBD]	190	[TBD]
North Slope Borough	ALTERNATE SITE 37 EXTRA	[TBD]	[TBD]	43	[TBD]
North Slope Borough	ALTERNATE SITE 36 EXTRA	[TBD]	[TBD]	44	[TBD]
North Slope Borough	ALTERNATE 65-9-059-2	[TBD]	[TBD]	62	[TBD]
North Slope Borough	ALTERNATE SITE 38 EXTRA	[TBD]	[TBD]	68	[TBD]
North Slope Borough	ALTERNATE SITE 39 EXTRA	[TBD]	[TBD]	96	[TBD]
North Slope Borough	GALBRAITH AIRSTRIP	[TBD]	[TBD]	83	[TBD]
North Slope Borough	65-9-056-2	[TBD]	[TBD]	122	[TBD]
North Slope Borough	ALTERNATE SITE 40 EXTRA	[TBD]	[TBD]	92	[TBD]
North Slope Borough	65-9-022-2	[TBD]	[TBD]	43	[TBD]
North Slope Borough	ALTERNATE SITE 41 EXTRA	[TBD]	[TBD]	67	[TBD]
North Slope Borough	65-9-008-2	[TBD]	[TBD]	158	[TBD]
North Slope Borough	CHANDALAR AIRSTRIP	[TBD]	[TBD]	150	[TBD]
North Slope Borough	UPPER DIETRICH	[TBD]	[TBD]	117	[TBD]
Yukon-Koyukuk census area	65-9-079-2	[TBD]	[TBD]	150	[TBD]
Yukon-Koyukuk census area	UNNAMED CREEK	[TBD]	[TBD]	128	[TBD]
Yukon-Koyukuk census area	PROPOSED SITE 2 EXTRA	[TBD]	[TBD]	68	[TBD]
Yukon-Koyukuk census area	ALTERNATE SITE 42 EXTRA	[TBD]	[TBD]	95	[TBD]
Yukon-Koyukuk census area	65-9-052-2	[TBD]	[TBD]	143	[TBD]
Yukon-Koyukuk census area	65-9-098-2	[TBD]	[TBD]	237	[TBD]
Yukon-Koyukuk census area	PROPOSED SITE 3 EXTRA	[TBD]	[TBD]	90	[TBD]
Yukon-Koyukuk census area	DHMP 166.5	[TBD]	[TBD]	119	[TBD]
Yukon-Koyukuk census area	SOUTH FORK KOYUKUK RIVER	[TBD]	[TBD]	166	[TBD]
Yukon-Koyukuk census area	ALTERNATE SITE 43 EXTRA	[TBD]	[TBD]	89	[TBD]
Yukon-Koyukuk census area	65-9-045-2	[TBD]	[TBD]	71	[TBD]
Yukon-Koyukuk census area	PROPOSED SITE 4 EXTRA	[TBD]	[TBD]	55	[TBD]

DRAFT

TABLE 1F-1

Alaska Pipeline Project
Distances to Borrow Sites

Segment/Borough or Census Area	Name of Borrow Area	Approximate Milepost	Distance and Direction from Pipeline [a]	Size [b] (acres)	Status[c]
Yukon-Koyukuk census area	ALTERNATE SITE 44 EXTRA	[TBD]	[TBD]	45	[TBD]
Yukon-Koyukuk census area	BONANZA WEST	[TBD]	[TBD]	105	[TBD]
Yukon-Koyukuk census area	ALTERNATE FISH CREEK	[TBD]	[TBD]	82	[TBD]
Yukon-Koyukuk census area	DHMP 112.3	[TBD]	[TBD]	145	[TBD]
Yukon-Koyukuk census area	65-9-075-2	[TBD]	[TBD]	24	[TBD]
Yukon-Koyukuk census area	KANUTI APPROACH	[TBD]	[TBD]	56	[TBD]
Yukon-Koyukuk census area	ALTERNATE HORNFELS	[TBD]	[TBD]	52	[TBD]
Yukon-Koyukuk census area	65-9-043-2	[TBD]	[TBD]	168	[TBD]
Yukon-Koyukuk census area	65-9-078-2	[TBD]	[TBD]	130	[TBD]
Yukon-Koyukuk census area	65-9-029-2	[TBD]	[TBD]	28	[TBD]
Yukon-Koyukuk census area	ALTERNATE SITE 45 EXTRA	[TBD]	[TBD]	83	[TBD]
Yukon-Koyukuk census area	ALTERNATE SITE 46 EXTRA	[TBD]	[TBD]	51	[TBD]
Yukon-Koyukuk census area	65-3-019-2	[TBD]	[TBD]	96	[TBD]
Yukon-Koyukuk census area	65-3-016-2	[TBD]	[TBD]	146	[TBD]
Yukon-Koyukuk census area	ALTERNATE 65-3-015-2	[TBD]	[TBD]	168	[TBD]
Yukon-Koyukuk census area	65-3-014-2	[TBD]	[TBD]	50	[TBD]
Yukon-Koyukuk census area	ALTERNATE 65-3-012-2	[TBD]	[TBD]	142	[TBD]
Yukon-Koyukuk census area	PROPOSED SITE 10 EXTRA	[TBD]	[TBD]	118	[TBD]
Yukon-Koyukuk census area	TOLOVANA D	[TBD]	[TBD]	191	[TBD]
Yukon-Koyukuk census area	ALTERNATE SITE 12 EXTRA	[TBD]	[TBD]	32	[TBD]
Yukon-Koyukuk census area	PROPOSED SITE 14 EXTRA	[TBD]	[TBD]	63	[TBD]
Yukon-Koyukuk census area	ALTERNATE 680-107-2	[TBD]	[TBD]	23	[TBD]
Fairbanks North Star Borough	ALTERNATE 680-015-2	[TBD]	[TBD]	16	[TBD]
Fairbanks North Star Borough	PROPOSED SITE 16 EXTRA	[TBD]	[TBD]	39	[TBD]
Fairbanks North Star Borough	PROPOSED SITE 18 EXTRA	[TBD]	[TBD]	64	[TBD]
Fairbanks North Star Borough	ALTERNATE SITE 19 EXTRA	[TBD]	[TBD]	63	[TBD]
Fairbanks North Star Borough	PROPOSED SITE 20 EXTRA	[TBD]	[TBD]	92	[TBD]
Fairbanks North Star Borough	ALTERNATE SITE 47 EXTRA	[TBD]	[TBD]	87	[TBD]
Fairbanks North Star Borough	PROPOSED SITE 21 EXTRA	[TBD]	[TBD]	87	[TBD]
Fairbanks North Star Borough	PROPOSED SITE 22 EXTRA	[TBD]	[TBD]	243	[TBD]
Fairbanks North Star Borough	ALTERNATE SITE 48 EXTRA	[TBD]	[TBD]	36	[TBD]
Fairbanks North Star Borough	ALTERNATE SITE 49 EXTRA	[TBD]	[TBD]	38	[TBD]
Fairbanks North Star Borough	PROPOSED SITE 23 EXTRA	[TBD]	[TBD]	124	[TBD]
Fairbanks North Star Borough	ALTERNATE SITE 50 EXTRA	[TBD]	[TBD]	48	[TBD]
Tanana-Tetlin census area	PROPOSED SITE 25 EXTRA	[TBD]	[TBD]	115	[TBD]

DRAFT

TABLE 1F-1

Alaska Pipeline Project
Distances to Borrow Sites

Segment/Borough or Census Area	Name of Borrow Area	Approximate Milepost	Distance and Direction from Pipeline [a]	Size [b] (acres)	Status[c]
Tanana-Tetlin census area	ALTERNATE 62-3-122-2	[TBD]	[TBD]	107	[TBD]
Tanana-Tetlin census area	62-3-157-2A	[TBD]	[TBD]	22	[TBD]
Tanana-Tetlin census area	ALTERNATE 711-008-2	[TBD]	[TBD]	57	[TBD]
Tanana-Tetlin census area	711-011-2	[TBD]	[TBD]	42	[TBD]
Tanana-Tetlin census area	711-002-2	[TBD]	[TBD]	87	[TBD]
Tanana-Tetlin census area	ALTERNATE 62-3-179-2	[TBD]	[TBD]	283	[TBD]
Tanana-Tetlin census area	62-3-078-2	[TBD]	[TBD]	130	[TBD]
Tanana-Tetlin census area	ALTERNATE SITE 51 EXTRA	[TBD]	[TBD]	88	[TBD]
Tanana-Tetlin census area	62-3-077-2	[TBD]	[TBD]	90	[TBD]
Tanana-Tetlin census area	62-3-073-2	[TBD]	[TBD]	165	[TBD]
Tanana-Tetlin census area	62-2-069-2	[TBD]	[TBD]	83	[TBD]
Tanana-Tetlin census area	62-2-066-2	[TBD]	[TBD]	62	[TBD]
Tanana-Tetlin census area	62-2-062-2	[TBD]	[TBD]	119	[TBD]
Tanana-Tetlin census area	ALTERNATE 62-2-022-5	[TBD]	[TBD]	22	[TBD]
Tanana-Tetlin census area	62-2-174-2	[TBD]	[TBD]	94	[TBD]
Tanana-Tetlin census area	ALTERNATE 62-2-177-2	[TBD]	[TBD]	189	[TBD]
Tanana-Tetlin census area	62-2-176-2	[TBD]	[TBD]	137	[TBD]
Tanana-Tetlin census area	ALTERNATE SITE 29 EXTRA	[TBD]	[TBD]	82	[TBD]
Tanana-Tetlin census area	62-2-171-2	[TBD]	[TBD]	52	[TBD]
Tanana-Tetlin census area	ALTERNATE SITE 30 EXTRA	[TBD]	[TBD]	184	[TBD]
Tanana-Tetlin census area	62-2-005-5(2)	[TBD]	[TBD]	159	[TBD]
Tanana-Tetlin census area	62-1-018-5	[TBD]	[TBD]	18	[TBD]
Tanana-Tetlin census area	ALTERNATE 62-1-016-5	[TBD]	[TBD]	46	[TBD]
Tanana-Tetlin census area	ALTERNATE SITE 52 EXTRA	[TBD]	[TBD]	71	[TBD]
Tanana-Tetlin census area	62-1-019-5	[TBD]	[TBD]	12	[TBD]
Tanana-Tetlin census area	ALTERNATE 62-1-020-5	[TBD]	[TBD]	173	[TBD]
Tanana-Tetlin census area	PROPOSED SITE 32 EXTRA OPTION B	[TBD]	[TBD]	119	[TBD]
Tanana-Tetlin census area	ALTERNATE SITE 53 EXTRA	[TBD]	[TBD]	68	[TBD]
Tanana-Tetlin census area	ALTERNATE 62-1-008-5	[TBD]	[TBD]	39	[TBD]
Tanana-Tetlin census area	62-1-168-2	[TBD]	[TBD]	73	[TBD]
Tanana-Tetlin census area	ALTERNATE 62-1-141-2	[TBD]	[TBD]	31	[TBD]
Tanana-Tetlin census area	62-1-007-5	[TBD]	[TBD]	61	[TBD]
Tanana-Tetlin census area	ALTERNATE 62-1-022-5	[TBD]	[TBD]	105	[TBD]
Tanana-Tetlin census area	62-1-002-5	[TBD]	[TBD]	34	[TBD]
Tanana-Tetlin census area	62-1-001-5	[TBD]	[TBD]	14	[TBD]
POINT THOMSON GAS TRANSMISSION PIPELINE					
North Slope Borough	Alternate borrow material site, access along trail from P1, P0	[TBD]	[TBD]	147	[TBD]
North Slope Borough	Prime borrow material site, AECOM potential borrow material site, access from existing road, P1	[TBD]	[TBD]	259	[TBD]
North Slope Borough	Alternate borrow material site, access along right of way or along trail P2	[TBD]	[TBD]	5	[TBD]
North Slope Borough	Alternate borrow material site, access along right of way or trail from P1, 2 miles east P3	[TBD]	[TBD]	57	[TBD]
North Slope Borough	Prime borrow material site, access along right of way, P4	[TBD]	[TBD]	107	[TBD]

DRAFT

TABLE 1F-1

Alaska Pipeline Project
Distances to Borrow Sites

Segment/Borough or Census Area	Name of Borrow Area	Approximate Milepost	Distance and Direction from Pipeline [a]	Size [b] (acres)	Status[c]
North Slope Borough	Alternate borrow material site, access along right of way, P5	[TBD]	[TBD]	93	[TBD]
North Slope Borough	Prime borrow material site, existing pit for the Badami field, AECOM active borrow material site, access along right of way, P6	[TBD]	[TBD]	66	[TBD]
North Slope Borough	Alternate borrow material site, access along right-of-way, P7a	[TBD]	[TBD]	63	[TBD]
North Slope Borough	Alternate borrow material site, access along right-of-way or access along trail near landing strip, P8	[TBD]	[TBD]	40	[TBD]
North Slope Borough	Prime borrow material site, access along right-of-way, P9	[TBD]	[TBD]	47	[TBD]
North Slope Borough	Alternate borrow material site, access along right-of-way, P10	[TBD]	[TBD]	64	[TBD]
North Slope Borough	Alternate borrow material site, access along right-of-way, P11a	[TBD]	[TBD]	115	[TBD]
North Slope Borough	Alternate borrow material site, access along right–of-way, P11b	[TBD]	[TBD]	58	[TBD]
North Slope Borough	Alternate sand borrow material site, access along right of way, P12	[TBD]	[TBD]	35	[TBD]
North Slope Borough	Alternate borrow material site, access along right-of-way, P13	[TBD]	[TBD]	59	[TBD]
North Slope Borough	Prime borrow material site, access along right-of-way, P14	[TBD]	[TBD]	49	[TBD]
North Slope Borough	Alternate borrow material site, archeology site access along right-of-way, P15	[TBD]	[TBD]	31	[TBD]
North Slope Borough	Prime borrow material site, access along right-of-way, P16	[TBD]	[TBD]	180	[TBD]
North Slope Borough	Alternate borrow material site, access along right-of-way, P17b	[TBD]	[TBD]	99	[TBD]
North Slope Borough	Alternate borrow material site, access along right-of-way, P17	[TBD]	[TBD]	68	[TBD]
North Slope Borough	Prime borrow material site, end pit extension	[TBD]	[TBD]	112	[TBD]
North Slope Borough	Alternate borrow material site, access along right-of-way, P18	[TBD]	[TBD]	156	[TBD]
North Slope Borough	Alternate borrow material site, access along right-of-way, extension of SAG C	[TBD]	[TBD]	180	[TBD]
North Slope Borough	Alternate borrow material site, access along road, Put pit 1 extension	[TBD]	[TBD]	53	[TBD]
North Slope Borough	Prime borrow material site, access along road, Put pit 2 extension	[TBD]	[TBD]	101	[TBD]

[a] Straight-line distance and direction from the borrow source to the pipeline. The actual distance by road or trail from a borrow source to the pipeline will be longer. N = North, E = East, S = South, W = West.

[b] The acreage noted in the table denotes the current estimated total area of the borrow source deposit. [Note: The area that will be developed and mined within a given deposit is being evaluated and additional information will be provided in the Draft Report.]

[c] [Note: Possible status categories include: Existing, re-use, closed, etc. The existing status of each borrow area is under evaluation and will be further defined in the Draft Report.]

DRAFT

APPENDIX 1G: RATIONALE FOR THE WIDTH OF THE CONSTRUCTION RIGHT-OF-WAY

DRAFT

RATIONALE FOR THE WIDTH OF THE ALASKA PIPELINE PROJECT CONSTRUCTION RIGHT-OF-WAY

The proposed project will be constructed under various seasonal and construction conditions. The proposed construction right-of-way widths for the proposed project are the minimum widths required to effectively, efficiently and safely construct a 48-inch-diameter pipeline. Construction right-of-way widths will be further refined as the route centerline is updated and established, additional geotechnical data is developed, and the construction execution plan is finalized. There will likely be hybrids of each of the proposed construction right-of-way sketches that may require modified construction right-of-way widths. The currently proposed cases represent a majority of the expected construction scenarios. It is also expected that the final centerline will pass through some restricted areas requiring reduced construction right-of-way widths.

Listed below are the three construction scenarios for the proposed project:

- Winter construction - south of the tree line;
- Summer construction - south of the tree line; and
- Winter construction - north of the tree line.

The construction right-of-way for the proposed project is divided into four main areas and a number of subareas, depending on the specific construction situation.

1) Spoil area:
    - Topsoil and loose surface material storage area;
    - Cut slope;
    - Bypass lane; and
    - Trench spoil.
2) Trench area:
    - Trench excavation and ripping.
3) Work area:
    - Pipe make-up; and
    - Primary work area.
4) Travel area:
    - Secondary work lane;
    - Travel lane;
    - Safety buffer; and
    - Fill slope.

Each configuration and their areas are described in detail below.

DRAFT

G-1 WINTER CONSTRUCTION - SOUTH OF THE TREE LINE (WIDTH: 160 FEET)

The right-of-way for winter construction south of the tree line will be made up of four areas: Spoil area (60 feet), trench area (20 feet), work area (40 feet), and travel area (40 feet) (refer to Figure G-1). Justifications for the four areas are discussed below.

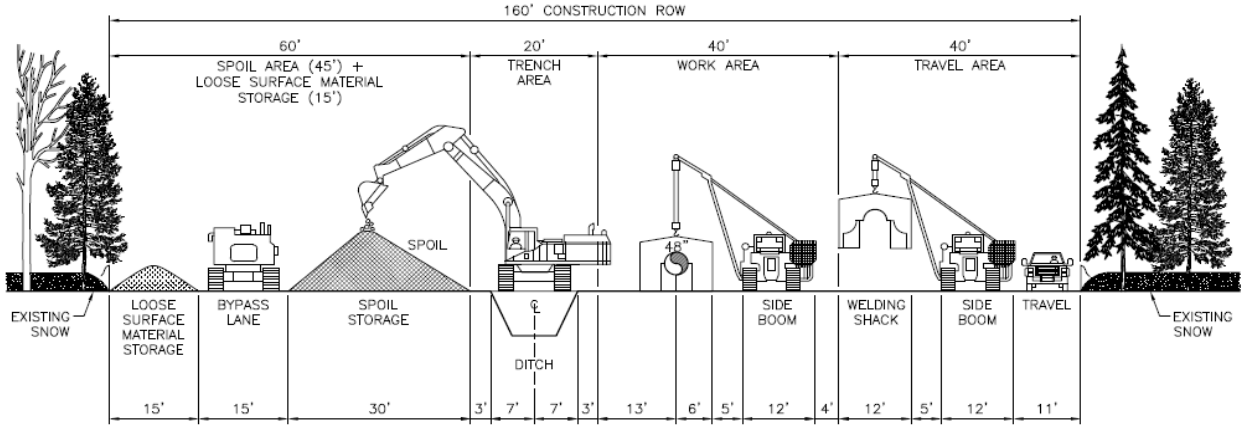

FIGURE G-1. Right-of-way Configuration for Winter Construction - South of the Tree Line

G-1.1 SPOIL AREA (WIDTH: 60 FEET)

The spoil storage area will comprise a 15-foot area for loose surface materials, 15-foot bypass lane and a 30-foot area for trench spoil.

G-1.1.1 Bypass Lane and Loose Surface Material Storage (WIDTH: 30 FEET)

Any snow and loose surface materials will be bladed over the proposed trench location to form an insulating trench line roach (mound). The base of the insulating roach will be approximately 20 feet in width. Just prior to trench excavation, this material will be bladed to the storage sides.

In the spoil area, the loose surface material will be mounded up 15 feet from the bottom of the spoil storage pile to make way for a bypass lane used to “leap frog” trenching equipment on the work side of the right-of-way alongside of the spoil pile. Additionally, should the pipe be welded in strings at the time of trench excavation, it is difficult to move trenching equipment to the work side of the right-of-way with the pipe strings in place.

During reclamation, the stored surface soil will be re-spread over the finished graded slopes and workspaces.

G-1.1.2 Spoil storage (WIDTH: 30 FEET)

The volume of trench spoil generated is dependent on the type of in-situ material in which the trench is excavated, the shape of the trench, and the type of equipment used to excavate the trench. The spoil generated in surficial materials, such as glacial till, will bulk at approximately 20 to 30 percent, whereas the spoil generated in bedrock will bulk at approximately 40 to 60 percent or more, depending on rock sizes generated by excavation. The spoil volumes generated by a wheel-trencher or chain-trencher will typically be less than the spoil generated by a tracked excavator track-hoe. Trencher-excavated trench shape is very consistent, however, track-hoe excavated trench shape varies depending on the materials being excavated,

DRAFT

back slope requirements, and to a lesser degree, the individual operator skill/preferences. The spoil generated by a wheel-trencher or chain-trencher in surficial materials will bulk at approximately 20 percent, a lower percentage range because the spoil created during excavation is of a smaller size and is more granular, whereas the spoil generated by a track-hoe will bulk at approximately 20 percent larger because it has larger soil aggregates because the displaced soils are excavated with a large bucket. A placement factor is also built into the spoil storage calculation. A placement factor of 10 percent is used for spoil placed by a wheel-trencher or chain-trencher because the spoil is placed by the machine. A consistent 3-foot setback from the trench can typically be maintained. A 30 percent placement factor is used for spoil placed by a track-hoe, since the spoil is placed under the control of the equipment operator and the setback can vary by a few feet from the desired 3-foot setback.

The slope of the spoil windrow is assumed to be at the angle of repose, which is approximately 1.5:1 (33 degrees); therefore, the calculation of the base width or how much space it takes up on the right-of-way is a factor of this angle. The bulking and placement factors are taken into account for this for determining the required spoil pile width.

G-1.2 TRENCH AREA (WIDTH: 20 FEET)

The trench area width is based on a 7-foot-deep trench with trench walls at a 1:0.5 back slope that yields an open trench width of 14 feet. There is a 3-foot-wide buffer on either side of the trench to reduce trench wall collapse due to external loading of equipment and or spoil pile.

G-1.3 WORK AREA (WIDTH: 40 FEET)

The work area comprises a 19-foot pipe make-up area and a 21-foot primary work area for safe sideboom operation.

G-1.3.1 Pipe Make-Up Area (Width: 19 FEET)

The pipe make-up area is dedicated to stringing, welding, and coating of the pipe before lowering in. The pipe must be set back from the trench to make room for safe maneuverability of trenching equipment, which includes wheel-trenchers, excavators, and dozers equipped with rippers. This trenching and ripping equipment must be able to work without the likelihood of damaging the welded pipe strings (refer to Figure G-2).

DRAFT

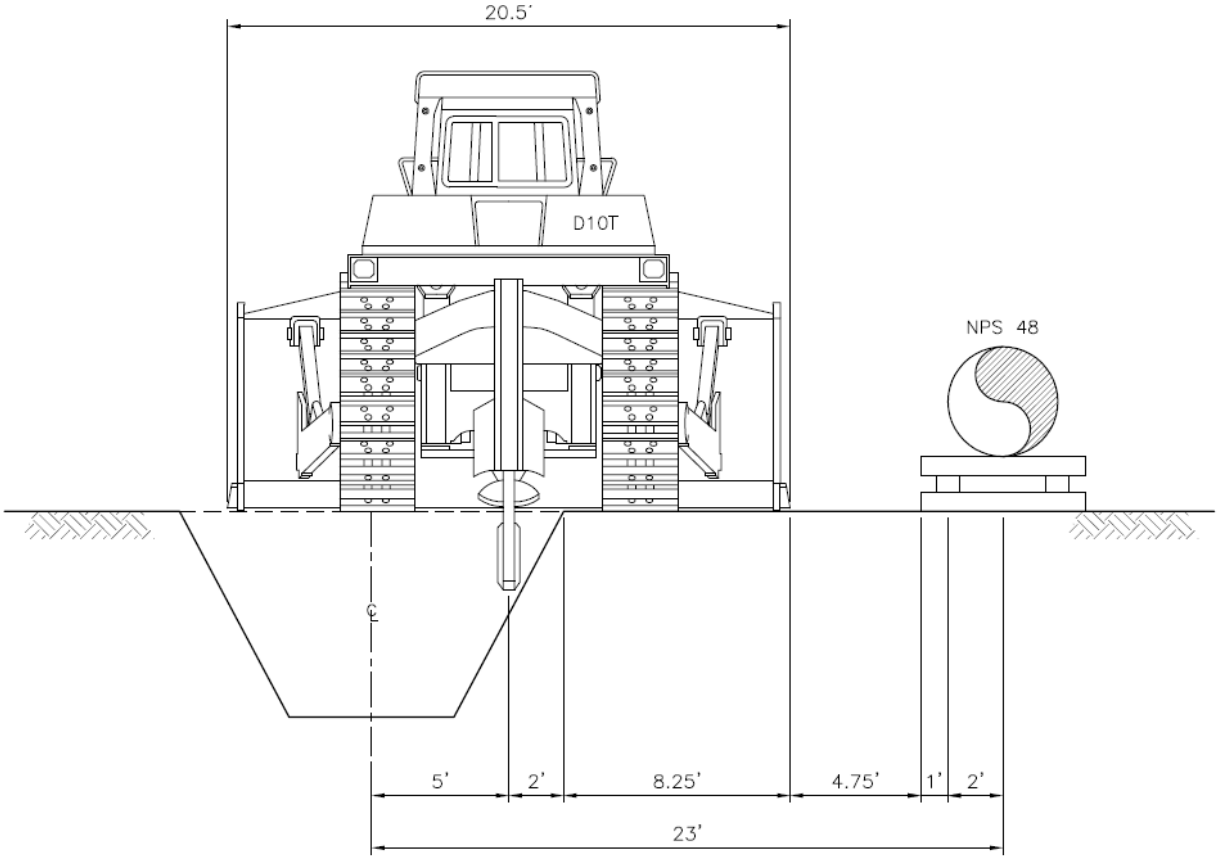

FIGURE G-2. Dozer With Single Shank Ripper

When ripping the trench line with a dozer, the single tooth ripper will require sufficient space between ripping lanes to efficiently rip the full width of the trench. The spacing must be wide enough to prevent the tracks of the dozer from getting bogged down in the previously loose ripped soil.

The width of the ripping lane offset combined with the 19-foot width of the dozer blade will leave a safety buffer between the blade and the pipe and skids of 6.5 feet. The ripper will also need to have the option to rip the trench on an angle for ripping efficiency

The pipe make-up area also accommodates the welding shack (12-foot-wide) maneuverability and provides a safe work area around the welding shack.

G-1.3.2 Primary Work Area (Width: 21 feet)

The primary work lane will accommodate offloading of stringing trucks, welding, joint coating, and lowering-in operations. In the stringing phase, the space will be occupied by stringing trucks and strung pipe.

In the welding phase, the space will be used for sidebooms and welding shacks, the welded pipe string and sidebooms with extended counter weights during lowering-in operations.

The sideboom will take up 29-feet from the outside of the extended counterweights to the centerline of the suspended pipe with the boom in its neutral position. This distance will increase as the pipe is lowered into the trench during lowering-in operations.

G-1.4 TRAVEL AREA (WIDTH: 40 FEET)

The travel area comprises a 29-foot secondary work lane and an 11-foot travel lane.

G-1.4.1 Secondary Work Lane (Width: 29 feet)

The secondary work lane is dedicated as a passing zone for moving equipment and materials up and down the construction right-of-way, such as welding shacks, maintenance vehicles, rock trucks, and fuel trucks. Sidebooms with welding shacks will require 29-feet of room while leap frogging around other welding shacks during welding operations.

G-1.4.2 Travel Lane (Width: 11 feet)

The travel lane is required for safe and efficient movement of the hundreds of daily pipe stringings and haulers, rock trucks, personnel, inspection staff, and other construction support vehicles. The lane will also be used for an emergency vehicle lane. The travel lane must remain unobstructed by sidebooms and other pipeline equipment so the large volume of traffic can move along the right-of-way in a timely manner.

G-2 SUMMER CONSTRUCTION - SOUTH OF THE TREE LINE (WIDTH: 175 FEET)

The right-of-way for summer construction south of the tree line will be made up of four areas: Spoil area (60 feet), trench area (20 feet), work area (40 feet), and travel area (55 feet) (refer to Figure G-3). Justifications for the four areas are discussed below.

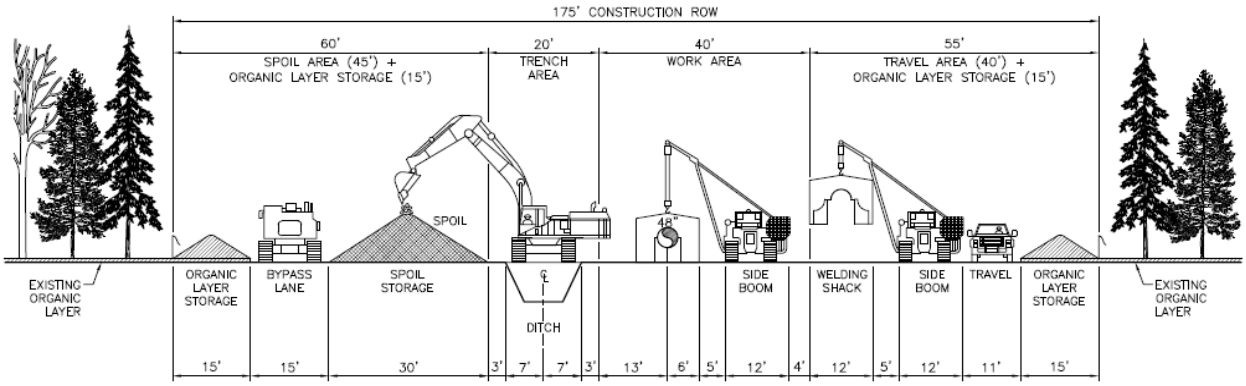

FIGURE G-3. Right-of-Way Configuration for Summer Construction - South of the Tree Line

G-2.1 SPOIL AREA (WIDTH: 60 FEET)

The spoil storage area comprises a 15-foot area for organic layer storage, a 15-foot area for a bypass lane and a 30-foot area for trench spoil.

G-2.1.1 Organic Layer Storage (Width: 15 feet)

In thaw-stable areas during summer construction, the loose surface organics (duff) are stored and used as a resource for reclamation purposes. In agricultural land topsoil will be stripped form all or only part of the ROW depending on circumstances. This reclamation material is windrowed to both sides of the proposed construction right-of-way for later use during reclamation. The volume of this material will vary depending on the type of vegetation cover and terrain.

During reclamation, the stored surface material will be re-spread over the finished graded slopes and workspaces.

G-2.1.2 Bypass Lane (Width: 15 feet)

This is a dedicated lane required to leap frog trenching equipment on the work side of the right-of-way alongside of the spoil pile. Unlike the loose surface material pile in winter construction, the organic pile cannot be flattened down and driven on by heavy equipment.

Travel on the organic pile must be prohibited to prevent the change that occurs in the soils composition from heavy traffic.

During reclamation, the organic layer will be re-spread over the finished graded slopes and workspaces.

G-2.1.3 Spoil Storage (Width: 30 feet)

This is the same as for spoil storage for winter construction south of the tree line in Section G-1.1.2.

G-2.2 TRENCH AREA (WIDTH: 20 FEET)

This is the same as for the trench area for construction south of the tree line in Section G-1.2.

G-2.3 WORK AREA (WIDTH: 40 FEET)

This is the same as for the work area for construction south of the tree line in Section G-1.3.

G-2.4 TRAVEL AREA (WIDTH: 55 FEET)

The travel area in summer construction is similar to the winter construction right-of-way with a 29-foot secondary work area and an 11-foot travel lane, but has an additional 15 feet for organic layer storage.

DRAFT

G-3 WINTER CONSTRUCTION - NORTH OF THE TREE LINE (WIDTH: 145 FEET)

The right-of-way for winter construction north of the tree line will be made up of four areas: Spoil area (45 feet), trench area (20 feet), work area (40 feet), and travel area (40 feet) (refer to Figure G-4).

This right-of-way configuration is essentially the same as winter construction south of the tree line, except in this case the right-of-way is built up with a snow and ice pad

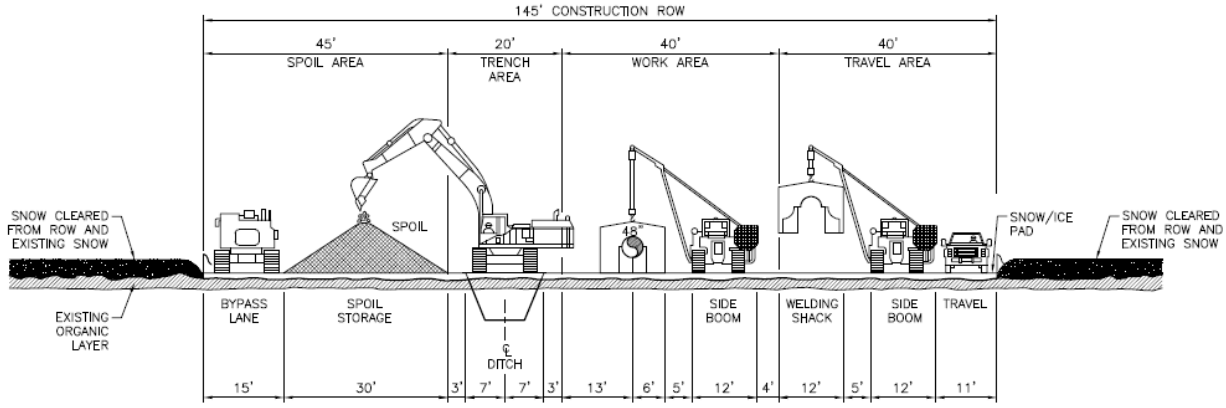

FIGURE G-4. Right-of-Way Configuration for Winter Construction - North of the Tree Line

G-4 WINTER CONSTRUCTION POINT THOMSON GAS PIPELINE (145 FEET)

The right-of-way for winter construction north of the tree line will be made up of four areas: Spoil area (39 feet), trench area (17 feet), work area (40 feet), and travel area (49 feet) (refer to Figure G-5).

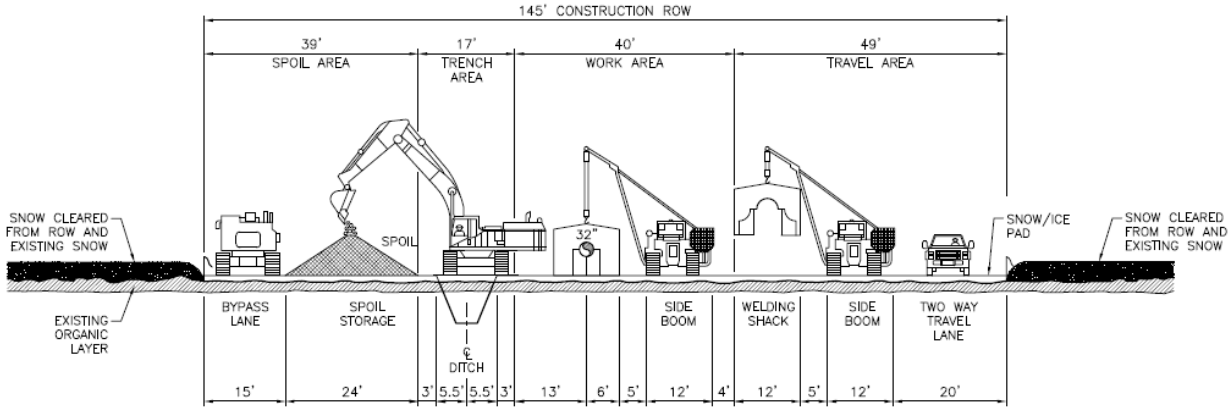

FIGURE G-5. Right-of-Way Configuration for the Point Thomson Gas Pipeline

G-4.1 SPOIL AREA (WIDTH: 39 FEET)

G-4.1 SPOIL AREA (WIDTH: 39 FEET)

The spoil storage area will is comprised of a 15-foot bypass lane and a 24-foot area for trench spoil.

G-4.1.1 Bypass Lane (Width: 15 feet)

Same as winter construction discussed above.

G-4.1.2 Spoil Storage (Width: 24 feet)

The spoil storage for this pipeline takes into account the factors mentioned above, however, due to the significant reduction in size of the pipeline trench, the spoil storage pile will consume just 24-feet of right-of-way.

G-4.2 TRENCH AREA (WIDTH: 17 FEET)

The trench area width is based on a 5-foot-deep trench with trench walls at a 1:0.5 back slope, which yields an open trench width of 11 feet. There is a 3-foot-buffer on either side of the trench to reduce trench wall collapse due to external loading of equipment and/or spoil pile.

G-4.3 WORK AREA (WIDTH: 40 FEET)

Same as winter construction discussed above.

G-4.4 TRAVEL AREA (WIDTH: 49 FEET)

The travel area is comprised of a 29-foot secondary work area and a 20-foot travel lane.

G-4.4.1 Secondary Work Lane (Width: 29 feet)

Same as winter construction discussed above.

G-4.4.2 Travel Lane (Width: 20 feet)

The travel lane is required for safe and efficient movement of the pipe stringing and haulers, rock trucks, personnel, inspection staff, and other construction support vehicles, as in the cases mentioned above, however, there are no accesses to intermediate points along the Point Thomson Gas Pipeline right-of-way and as a result, the right-of-way is the only access available to construct the pipeline.

The travel lane must be wide enough to accommodate two vehicles traveling in opposite directions during construction.

G-5 SIDE SLOPES NORTH OF TREE LINE

The right-of-way for winter construction north of the tree line on side slopes will be made up of four areas: Spoil area (45 feet), trench area (20 feet), work area (40 feet), and travel area (40 feet but varies) (refer to Figure G-6).

The right-of-way width north of the tree line will be required to be 145-feet-wide, however, where side slopes occur, the width of the right-of-way will vary based on the degree of the side slope

DRAFT

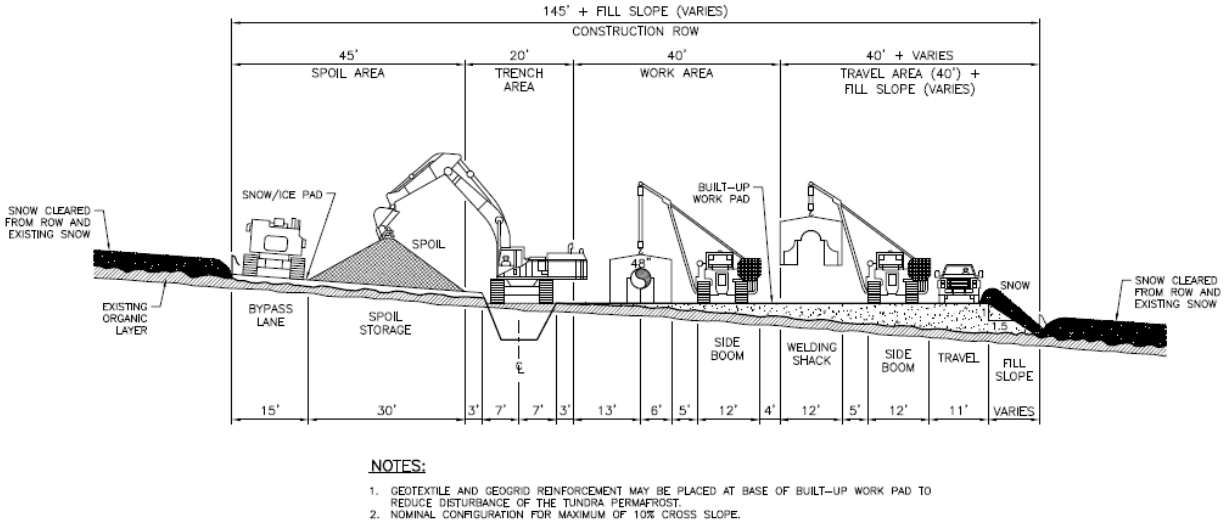

FIGURE G-6. Right-of-way Configuration for a Side Slope for Winter Construction - North of the Tree Line.

G-6 SIDE SLOPES SOUTH OF TREE LINE

The right-of-way for winter construction north of the tree line on side slopes will be made up of four areas: Spoil area (60 feet but varies.), trench area (20 feet), work area (40 feet), and travel area (40 feet but varies) (refer to Figure G-7).

The right-of-way width south of the tree line will be required to be 160-feet-wide, however, where side slopes occur and cut and fill is required, the width of the right-of-way will vary based on the degree of side slope and soil characteristics.

For cross slopes 10 percent and greater, a safety buffer from the edge of the travel lane to the edge of the fill slope will be used. The safety buffer is required for potential soft-shoulder conditions on the edge of the fill slope. The allocated buffer zone will be based on the actual material used for the fill slope and specific cross slope angle.

DRAFT

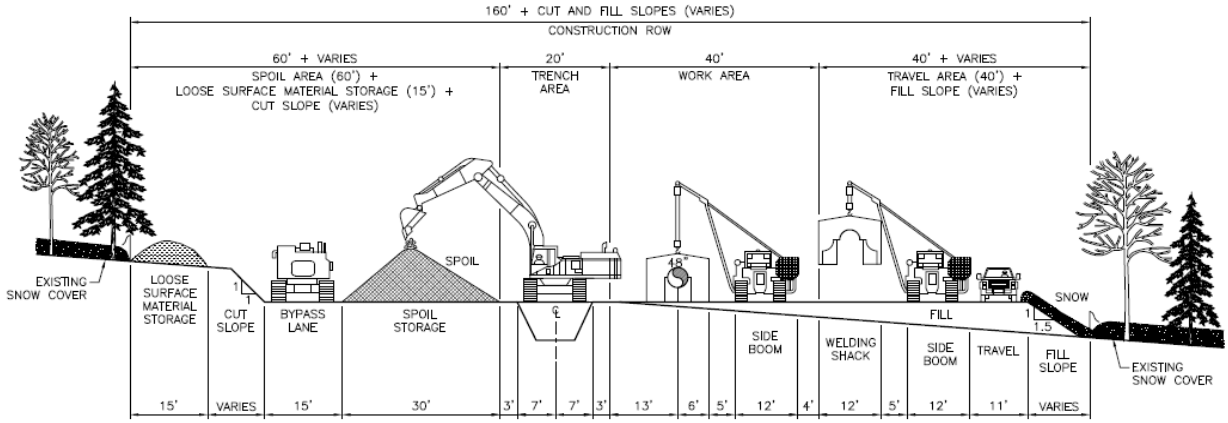

FIGURE G-7. Right-of-Way Configuration for a Side Slope for Winter Construction - South of the Tree Line.

DRAFT

APPENDIX 1H: TABLE OF CONSTRUCTION RIGHTS-OF-WAY BY MILEPOST

[Note: This table will be provided in the Draft Report.]

DRAFT

APPENDIX 1I: ALASKA PIPELINE PROJECT'S UPLAND EROSION CONTROL, REVEGETATION, AND MAINTENANCE PLAN

[Note: This document will be provided in the Draft Report.]

DRAFT

APPENDIX 1J: ALASKA PIPELINE PROJECT'S WETLAND AND WATERBODY CONSTRUCTION AND MITIGATION PROCEDURES

[Note: This document will be provided in the Draft Report.]

DRAFT

APPENDIX 1K: AGENCY CORRESPONDENCE

[Note: This appendix will be provided in the Draft Report.]

DRAFT

APPENDIX 1L: AFFECTED LANDOWNER NAMES AND ADDRESSES

[Note: This list will be provided in the Draft Report.]

DRAFT